NOTICE OF AWARD

State Of Missouri
Office Of Administration
Division Of Purchasing And Materials Management
PO Box 809
Jefferson City, MO 65102-0809
http://content.oa.mo.gov/purchasing-materials-management

SOLICITATION NUMBER	CONTRACT TITLE
B1E14173	Food Service Equipment
CONTRACT NUMBER	**CONTRACT PERIOD**
C114173001	April 18, 2014 through April 17, 2015
REQUISITION NUMBER	**VENDOR NUMBER**
NR 931 YYY14709128	8407027630 1
CONTRACTOR NAME AND ADDRESS	**STATE AGENCY'S NAME AND ADDRESS**
Grady's Foodservice Equipment & Supplies 430 West 4th Street Pueblo, CO 81003	Missouri Department of Corrections Various Agency Locations

ACCEPTED BY THE STATE OF MISSOURI AS FOLLOWS:

The bid submitted by Grady's Foodservice Equipment & Supplies in response to B1E14173, including the attached email dated, 03/13/14, is accepted for Category 1: Coffee Urns (Line items 001 and 002).

BUYER	BUYER CONTACT INFORMATION
Jacqueline Satterlee	Email: jacqueline.satterlee@oa.mo.gov Phone: (573) 751- 4925 Fax: (573) 526-9816
SIGNATURE OF BUYER	**DATE**
Jacque Satterlee	4/18/14

DIRECTOR OF PURCHASING AND MATERIALS MANAGEMENT

James M Klueppel

STATE OF MISSOURI
OFFICE OF ADMINISTRATION
DIVISION OF PURCHASING AND MATERIALS MANAGEMENT (DPMM)
INVITATION FOR BID (IFB)

AMENDMENT NO.: 003
IFB NO.: B1E14173
TITLE: FOOD SERVICE EQUIPMENT
ISSUE DATE: 02/18/14

REQ NO.: NR 931 YYY14709128
BUYER: JACQUELINE SATTERLEE
PHONE NO.: (573) 751-4925
E-MAIL: jacqueline.satterlee@oa.mo.gov

RETURN BID NO LATER THAN: 02/25/14 AT 2:00 PM CENTRAL TIME

MAILING INSTRUCTIONS: Print or type **IFB Number** and **Return Due Date** on the lower left hand corner of the envelope or package. Delivered sealed bids must be in DPMM office (301 W High Street, Room 630) by the return date and time.

RETURN BID AND AMENDMENT(S) TO:

(U.S. Mail)		(Courier Service)
DPMM	**or**	**DPMM**
PO BOX 809		**301 WEST HIGH STREET, ROOM 630**
JEFFERSON CITY MO 65102-0809		**JEFFERSON CITY MO 65101-1517**

CONTRACT PERIOD: DATE OF AWARD THROUGH ONE (1) YEAR

DELIVER SUPPLIES/SERVICES FOB (Free On Board) DESTINATION TO THE FOLLOWING ADDRESS:

MISSOURI DEPARTMENT OF CORRECTIONS
VARIOUS AGENCY LOCATIONS

The bidder hereby declares understanding, agreement and certification of compliance to provide the items and/or services, at the prices quoted, in accordance with all terms and conditions, requirements, and specifications of the original IFB as modified by this and any previously issued IFB amendments. The bidder should, as a matter of clarity and assurance, also sign and return all previously issued IFB amendment(s) and the original IFB document. The bidder agrees that the language of the original IFB as modified by this and any previously issued IFB amendments shall govern in the event of a conflict with his/her bid. The bidder further agrees that upon receipt of an authorized purchase order from the Division of Purchasing and Materials Management or when a Notice of Award is signed and issued by an authorized official of the State of Missouri, a binding contract shall exist between the bidder and the State of Missouri.

SIGNATURE REQUIRED

DOING BUSINESS AS (DBA) NAME	LEGAL NAME OF ENTITY/INDIVIDUAL FILED WITH IRS FOR THIS TAX ID NO.
Grady's Restaurant & Bar Supply	Pueblo Hotel Supply
MAILING ADDRESS: 430 W 4th St	IRS FORM 1099 MAILING ADDRESS: 430 W 4th St
CITY, STATE, ZIP CODE: Pueblo CO 81003	CITY, STATE, ZIP CODE: Pueblo CO 81003

CONTACT PERSON	EMAIL ADDRESS
Jamie Arguello	jamie@gogradys.com
PHONE NUMBER: 800-566-7068	FAX NUMBER: 719-542-8857

TAXPAYER ID NUMBER (TIN)	TAXPAYER ID (TIN) TYPE (CHECK ONE)	VENDOR NUMBER (IF KNOWN)
840702763	X FEIN ___ SSN	

VENDOR TAX FILING TYPE WITH IRS (CHECK ONE)

X Corporation ___ Individual ___ State/Local Government ___ Partnership ___ Sole Proprietor ___ IRS Tax-Exempt

AUTHORIZED SIGNATURE	DATE
Jamie Arguello	3-28-14
PRINTED NAME: Jamie Arguello	TITLE: Sales

AMENDMENT #003 to IFB B1E14173

TITLE: FOOD SERVICE EQUIPMENT

CONTRACT PERIOD: DATE OF AWARD THROUGH ONE (1) YEAR

PROSPECTIVE BIDDERS ARE HEREBY NOTIFIED OF THE FOLLOWING CHANGE:

Note: The following delivery rates of the amendment have been ***italicized and bolded***.

LINE ITEM 1 is an REVISED

STATE OF MISSOURI
OFFICE OF ADMINISTRATION
DIVISION OF PURCHASING AND MATERIALS MANAGEMENT (DPMM)
INVITATION FOR BID (IFB)

AMENDMENT NO.: 002
IFB NO.: B1E14173
TITLE: FOOD SERVICE EQUIPMENT
ISSUE DATE: 02/14/14

REQ NO.: NR 931 YYY14709128
BUYER: JACQUELINE SATTERLEE
PHONE NO.: (573) 751-4925
E-MAIL: jacqueline.satterlee@oa.mo.gov

RETURN BID NO LATER THAN: 02/25/14 AT 2:00 PM CENTRAL TIME

MAILING INSTRUCTIONS: Print or type **IFB Number** and **Return Due Date** on the lower left hand corner of the envelope or package. Delivered sealed bids must be in DPMM office (301 W High Street, Room 630) by the return date and time.

RETURN BID AND AMENDMENT(S) TO:

(U.S. Mail)		(Courier Service)
DPMM	or	DPMM
PO BOX 809		301 WEST HIGH STREET, ROOM 630
JEFFERSON CITY MO 65102-0809		JEFFERSON CITY MO 65101-1517

CONTRACT PERIOD: DATE OF AWARD THROUGH ONE (1) YEAR

DELIVER SUPPLIES/SERVICES FOB (Free On Board) DESTINATION TO THE FOLLOWING ADDRESS:

MISSOURI DEPARTMENT OF CORRECTIONS
VARIOUS AGENCY LOCATIONS

The bidder hereby declares understanding, agreement and certification of compliance to provide the items and/or services, at the prices quoted, in accordance with all terms and conditions, requirements, and specifications of the original IFB as modified by this and any previously issued IFB amendments. The bidder should, as a matter of clarity and assurance, also sign and return all previously issued IFB amendment(s) and the original IFB document. The bidder agrees that the language of the original IFB as modified by this and any previously issued IFB amendments shall govern in the event of a conflict with his/her bid. The bidder further agrees that upon receipt of an authorized purchase order from the Division of Purchasing and Materials Management or when a Notice of Award is signed and issued by an authorized official of the State of Missouri, a binding contract shall exist between the bidder and the State of Missouri.

SIGNATURE REQUIRED

DOING BUSINESS AS (DBA) NAME	LEGAL NAME OF ENTITY/INDIVIDUAL FILED WITH IRS FOR THIS TAX ID NO.
Grady's Restaurant & Bar Supply	Pueblo Hotel Supply
MAILING ADDRESS: 430 W 4th St	IRS FORM 1099 MAILING ADDRESS: 430 W 4th St
CITY, STATE, ZIP CODE: Pueblo CO 81003	CITY, STATE, ZIP CODE: Pueblo CO 81003

CONTACT PERSON		EMAIL ADDRESS
Jamie Arguello		jamie@gogradys.com
PHONE NUMBER: 800-566-7068		FAX NUMBER: 719-542-8857
TAXPAYER ID NUMBER (TIN): 840702763	TAXPAYER ID (TIN) TYPE (CHECK ONE): X FEIN ___ SSN	VENDOR NUMBER (IF KNOWN):

VENDOR TAX FILING TYPE WITH IRS (CHECK ONE)

X Corporation ___ Individual ___ State/Local Government ___ Partnership ___ Sole Proprietor ___ IRS Tax-Exempt

AUTHORIZED SIGNATURE	DATE
Jamie Arguello	3-28-14
PRINTED NAME: Jamie Arguello	TITLE: Sales

AMENDMENT #002 to IFB B1E14173

TITLE: FOOD SERVICE EQUIPMENT

CONTRACT PERIOD: DATE OF AWARD THROUGH ONE (1) YEAR

PROSPECTIVE BIDDERS ARE HEREBY NOTIFIED OF THE FOLLOWING CHANGE:

2. The closing date has been **REVISED**:
3. [illegible] **REVISED** to 2:00 PM for B1E14173

Note: The changes made as a result of this amendment have been ***italicized and bolded***.

STATE OF MISSOURI
OFFICE OF ADMINISTRATION
DIVISION OF PURCHASING AND MATERIALS MANAGEMENT (DPMM)
INVITATION FOR BID (IFB)

AMENDMENT NO.: 001
IFB NO.: B1E14173
TITLE: FOOD SERVICE EQUIPMENT
ISSUE DATE: 01/27/14

REQ NO.: NR 931 YYY14709128
BUYER: JACQUELINE SATTERLEE
PHONE NO.: (573) 751-4925
E-MAIL: jacqueline.satterlee@oa.mo.gov

REVISED BY AMENDMENT #002

RETURN BID NO LATER THAN: *02/25/14 AT 2:00 PM CENTRAL TIME*

MAILING INSTRUCTIONS: Print or type **IFB Number** and **Return Due Date** on the lower left hand corner of the envelope or package. Delivered sealed bids must be in DPMM office (301 W High Street, Room 630) by the return date and time.

RETURN BID AND AMENDMENT(S) TO:

(U.S. Mail)		(Courier Service)
DPMM	or	DPMM
PO BOX 809		301 WEST HIGH STREET, ROOM 630
JEFFERSON CITY MO 65102-0809		JEFFERSON CITY MO 65101-1517

CONTRACT PERIOD: DATE OF AWARD THROUGH ONE (1) YEAR

DELIVER SUPPLIES/SERVICES FOB (Free On Board) DESTINATION TO THE FOLLOWING ADDRESS:

MISSOURI DEPARTMENT OF CORRECTIONS
VARIOUS AGENCY LOCATIONS

The bidder hereby declares understanding, agreement and certification of compliance to provide the items and/or services, at the prices quoted, in accordance with all terms and conditions, requirements, and specifications of the original IFB as modified by this and any previously issued IFB amendments. The bidder should, as a matter of clarity and assurance, also sign and return all previously issued IFB amendment(s) and the original IFB document. The bidder agrees that the language of the original IFB as modified by this and any previously issued IFB amendments shall govern in the event of a conflict with his/her bid. The bidder further agrees that upon receipt of an authorized purchase order from the Division of Purchasing and Materials Management or when a Notice of Award is signed and issued by an authorized official of the State of Missouri, a binding contract shall exist between the bidder and the State of Missouri.

SIGNATURE REQUIRED

DOING BUSINESS AS (DBA) NAME	LEGAL NAME OF ENTITY/INDIVIDUAL FILED WITH IRS FOR THIS TAX ID NO.
Grady's Restaurant & Bar Supply	Pueblo Hotel Supply
MAILING ADDRESS: 430 W 4th St	IRS FORM 1099 MAILING ADDRESS: 430 W 4th St
CITY, STATE, ZIP CODE: Pueblo CO 81003	CITY, STATE, ZIP CODE: Pueblo CO 81003

CONTACT PERSON	EMAIL ADDRESS
Jamie Arguello	jamie@gogradys.com
PHONE NUMBER: 800-566-7068	FAX NUMBER: 719-542-8857

TAXPAYER ID NUMBER (TIN)	TAXPAYER ID (TIN) TYPE (CHECK ONE)	VENDOR NUMBER (IF KNOWN)
840702763	X FEIN ___ SSN	

VENDOR TAX FILING TYPE WITH IRS (CHECK ONE)

X Corporation ___ Individual ___ State/Local Government ___ Partnership ___ Sole Proprietor ___ IRS Tax-Exempt

AUTHORIZED SIGNATURE	DATE
Jamie Arguello	3-28-14
PRINTED NAME: Jamie Arguello	TITLE: Sales

AMENDMENT #001 to IFB B1E14173

TITLE: FOOD SERVICE EQUIPMENT

CONTRACT PERIOD: DATE OF AWARD THROUGH ONE (1) YEAR

PROSPECTIVE BIDDERS ARE HEREBY NOTIFIED OF THE FOLLOWING CHANGE:

1. The closing date has been **REVISED**:
   ~~Changed to~~: Return bid no later than: 02/18/14 at 2:00 PM.

STATE OF MISSOURI
OFFICE OF ADMINISTRATION
DIVISION OF PURCHASING AND MATERIALS MANAGEMENT (DPMM)
INVITATION FOR BID (IFB)

IFB NO.: B1E14173
TITLE: FOOD SERVICE EQUIPMENT
ISSUE DATE: 01/21/14

REQ NO.: NR 931 YYY14709128
BUYER: JACQUELINE SATTERLEE
PHONE NO.: (573) 751-4925
E-MAIL: jacqueline.satterlee@oa.mo.gov

RETURN BID NO LATER THAN: 02/12/14 AT 2:00 PM CENTRAL TIME

MAILING INSTRUCTIONS: Print or type **IFB Number** and **Return Due Date** on the lower left hand corner of the envelope or package. Delivered sealed bids must be in DPMM office (301 W High Street, Room 630) by the return date and time.

RETURN BID TO:

(U.S. Mail)
DPMM
PO BOX 809
JEFFERSON CITY MO 65102-0809

or

(Courier Service)
DPMM
301 WEST HIGH STREET, ROOM 630
JEFFERSON CITY MO 65101-1517

CONTRACT PERIOD: DATE OF AWARD THROUGH ONE (1) YEAR

DELIVER SUPPLIES/SERVICES FOB (Free On Board) DESTINATION TO THE FOLLOWING ADDRESS:

MISSOURI DEPARTMENT OF CORRECTIONS
VARIOUS AGENCY LOCATIONS

The bidder hereby declares understanding, agreement and certification of compliance to provide the items and/or services, at the prices quoted, in accordance with all requirements and specifications contained herein and the Terms and Conditions Invitation for Bid (Revised 12/27/12). The bidder further agrees that the language of this IFB shall govern in the event of a conflict with his/her bid. The bidder further agrees that upon receipt of an authorized purchase order from the Division of Purchasing and Materials Management or when a Notice of Award is signed and issued by an authorized official of the State of Missouri, a binding contract shall exist between the bidder and the State of Missouri.

SIGNATURE REQUIRED

DOING BUSINESS AS (DBA) NAME	LEGAL NAME OF ENTITY/INDIVIDUAL FILED WITH IRS FOR THIS TAX ID NO.
GRADY'S FOODSERVICE EQUIPMENT & SUPPLIES	PUEBLO HOTEL SUPPLY, INC
MAILING ADDRESS	IRS FORM 1099 MAILING ADDRESS
430 WEST 4TH STREET	430 WEST 4TH STREET
CITY, STATE, ZIP CODE	CITY, STATE, ZIP CODE
PUEBLO, CO 81003	PUEBLO, CO 81003

CONTACT PERSON	EMAIL ADDRESS
JAMIE ARGUELLO	JAMIE@GOGRADYS.COM
PHONE NUMBER	FAX NUMBER
719-542-8853	719-542-8857

TAXPAYER ID NUMBER (TIN)	TAXPAYER ID (TIN) TYPE (CHECK ONE)	VENDOR NUMBER (IF KNOWN)
84-0702736	X FEIN ___ SSN	840702763O1

VENDOR TAX FILING TYPE WITH IRS (CHECK ONE)

X Corporation ___ Individual ___ State/Local Government ___ Partnership ___ Sole Proprietor ___IRS Tax-Exempt

AUTHORIZED SIGNATURE	DATE
Jamie Arguello	02/16/2014
PRINTED NAME	TITLE
JAMIE ARGUELLO	SALES MANAGER

Satterlee, Jacqueline

From: Jamie Arguello [jamie@gogradys.com]
Sent: Thursday, March 13, 2014 3:04 PM
To: Satterlee, Jacqueline
Subject: Re: B1E14173 - Food Service Equipment

Hello Jacqueline,

My apologies for the confusion. We are quoting the Grindmaster for line item 001 for IFB B1E14173. Please let me know if you have any questions or need any additional information from me.

Thanks-

Jamie

On Thu, Mar 13, 2014 at 1:35 PM, Satterlee, Jacqueline <Jacqueline.Satterlee@oa.mo.gov> wrote:
> Jamie,
>
> Could you please clarify for line item 001 for the IFB referenced above what brand is being bid? On the Pricing Page there is the Grindmaster brand listed, but on the spec sheets submitted there are two different brands, AMW and Grindmaster. Could you please clarify which brand would be provided to the state of Missouri?
>
> -----Original Message-----
> From: Jamie Arguello [mailto:jamie@gogradys.com]
> Sent: Wednesday, March 12, 2014 1:38 PM
> To: Satterlee, Jacqueline
> Subject: Re: B1E14173 - Food Service Equipment
>
> Hello Jacqueline,
>
> Please use the pricing on the pricing pages. Sorry for the confusion.
>
> Thanks,
>
> Jamie
>
> On Wed, Mar 12, 2014 at 12:24 PM, Satterlee, Jacqueline <Jacqueline.Satterlee@oa.mo.gov> wrote:
>> Jamie,
>>
>>
>>
>> Could you please clarify which pricing is to be evaluated for the IFB
>> referenced above? The pricing on the pricing pages, or the pricing
>> on the attached quote?
>>
>>
>>
>> Thanks,
>>
>> Jacqueline Satterlee
>>

Satterlee, Jacqueline

From: Jamie Arguello [jamie@gogradys.com]
Sent: Tuesday, April 01, 2014 11:38 AM
To: Satterlee, Jacqueline
Cc: Irene Padilla
Subject: Re: B1E14173 - Food Service Equipment

Good Morning Jacqueline,

I am emailing you to verify that Grady's Foodservice Equipment and Supplies only engages in interstate commerce in Missouri, and is exempt from being registered with the Secretary of State's Office.

Please do not hesitate to reach out to me if you have any questions or if I can be of any assistance.

Thanks-

Jamie

On Tue, Apr 1, 2014 at 9:59 AM, Satterlee, Jacqueline <Jacqueline.Satterlee@oa.mo.gov> wrote:
> Jamie,
>
>
>
> While evaluating Grady's bid for the IFB referenced above I must
> verify that your company is registered with the Missouri Secretary of
> State's Office. I have tried searching "Grady's Foodservice Equipment
> and Supplies," and "Pueblo Hotel Supply " and have not had any results.
>
>
>
> · Is there another company name I should be searching?
>
> · Do you know Grady's charter number with the Missouri Secretary of
> State's Office?
>
> · Or can you verify that Grady's Foodservice Equipment and Supplies
> only engages in interstate commerce in Missouri, and is exempt from
> being registered with the Secretary of State's Office in reply to this email?
>
>
>
> Please feel free to contact me with any questions. Please reply to
> this email no later than today 04/01/14 by 3:30 p.m. CST.
>
>
>
> Thanks,
>
> Jacqueline Satterlee
>
> Buyer
>

1. INTRODUCTION AND GENERAL INFORMATION

1.1 Purpose:

1.1.1 This document constitutes an invitation for sealed bids from prospective bidders for the purchase of miscellaneous food service equipment for the State of Missouri, Department of Corrections (hereinafter referred to as "state agency"), in accordance with the requirements and provisions stated herein.

1.1.2 This bid is for purchase and delivery only and does not include any labor or installation.

2. CONTRACTUAL REQUIREMENTS

2.1 Contract:

2.1.1 A binding contract shall consist of: (1) the IFB and any amendments thereto, (2) the contractor's response (bid) to the IFB, (3) clarification of the bid, if any, and (4) the Division of Purchasing and Materials Management's acceptance of the response (bid) by "notice of award". All Exhibits and Attachments included in the IFB shall be incorporated into the contract by reference.

2.1.2 A notice of award issued by the State of Missouri does not constitute an authorization for shipment of equipment or supplies or a directive to proceed with services. Before providing equipment, supplies and/or services for the State of Missouri, the contractor must receive a properly authorized purchase order or other form of authorization given to the contractor at the discretion of the state agency.

2.1.3 The contract expresses the complete agreement of the parties and performance shall be governed solely by the specifications and requirements contained therein.

2.1.4 Any change to the contract, whether by modification and/or supplementation, must be accomplished by a formal contract amendment signed and approved by and between the duly authorized representative of the contractor and the Division of Purchasing and Materials Management prior to the effective date of such modification. The contractor expressly and explicitly understands and agrees that no other method and/or no other document, including correspondence, acts, and oral communications by or from any person, shall be used or construed as an amendment or modification to the contract.

2.2 Contract Period:

2.2.1 The original contract period shall be as stated on the Notice of Award. The contract shall not bind, nor purport to bind, the state for any contractual commitment in excess of the original contract period.

2.3 Price:

2.3.1 All prices shall be as indicated on the Pricing Page. The state shall not pay nor be liable for any other additional costs including but not limited to taxes, shipping charges, insurance, interest, penalties, termination payments, attorney fees, liquidated damages, etc.

2.4 Prices Must Be Lowest:

2.4.1 The contractor's prices must be the lowest offered to any governmental or commercial consumer, under the same terms and conditions.

2.5 Payment Terms:

2.5.1 The contractor shall understand and agree the state reserves the right to make contract payments to the contractor through electronic funds transfer (EFT). Therefore, prior to any payments becoming due under the contract, the contractor must return a completed state Vendor ACH/EFT Application, which is downloadable from the Vendor Services Portal at: https://www.vendorservices.mo.gov/vendorservices/Portal/Default.aspx.

Each contractor invoice must be on the contractor's original descriptive business invoice form and must contain a unique invoice number. The invoice number will be listed on the state's EFT addendum record to enable the contractor to properly apply state payments to invoices. The contractor must comply with all other invoicing requirements stated in the IFB.

2.5.2 The contractor may obtain detailed information for payments issued for the past 24 months from the State of Missouri's central accounting system (SAM II) on the Vendor Services Portal at https://www.vendorservices.mo.gov/vendorservices/Portal/Default.aspx.

2.5.3 All payment terms shall be as stated in the Terms and Conditions of the contract (see paragraph 10, "Invoicing and Payment") unless otherwise addressed in the IFB, or mutually agreed to by the state and the contractor. Payment terms should be net 30 days unless otherwise stated in the IFB. No late charges shall be applied which are not in compliance with Chapter 34.055 RSMo. This statute may be found at http://www.moga.mo.gov/STATUTES/STATUTES.HTM.

2.6 Point of Contact:

2.6.1 The contractor shall function as the single point of contact for all contract activities regardless of any subcontract arrangement for any product or service. This shall include assuming responsibilities and liabilities for any and all problems relating to all materials, equipment and services provided.

2.7 Contractor Liability:

2.7.1 The contractor shall be responsible for any and all personal injury (including death) or property damage as a result of the contractor's negligence involving any equipment or service provided under the terms and conditions, requirements and specifications of the contract. In addition, the contractor assumes the obligation to save the State of Missouri, including its agencies, employees, and assignees, from every expense, liability, or payment arising out of such negligent act. The contractor also agrees to hold the State of Missouri, including its agencies, employees, and assignees, harmless for any negligent act or omission committed by any subcontractor or other person employed by or under the supervision of the contractor under the terms of the contract.

2.7.2 The contractor shall not be responsible for any injury or damage occurring as a result of any negligent act or omission committed by the State of Missouri, including its agencies, employees, and assignees.

2.8 Subcontractors:

2.8.1 Any subcontracts for the products/services described herein must include appropriate provisions and contractual obligations to ensure the successful fulfillment of all contractual obligations agreed to by the contractor and the State of Missouri and to ensure that the State of Missouri is indemnified, saved, and held harmless from and against any and all claims of damage, loss, and cost (including attorney fees) of any kind related to a subcontract in those matters described in the contract between the State of Missouri and the contractor. The contractor shall expressly understand and agree that he/she shall assume and be solely responsible for all legal and financial responsibilities related to the execution of a subcontract. The contractor shall agree and understand that utilization of a subcontractor to provide any of the products/services in the contract shall in no way relieve the contractor of the responsibility for providing the products/services as described and set forth herein. The contractor must obtain the approval of the State of Missouri prior to establishing any new subcontracting arrangements and before changing any subcontractors. The approval shall not be arbitrarily withheld.

2.9 Independent Contractor:

2.9.1 The contractor is an independent contractor and shall not represent the contractor or the contractor's employees to be employees of the State of Missouri or an agency of the State of Missouri. The contractor shall assume all legal and financial responsibility for salaries, taxes, FICA, employee fringe benefits, workers compensation, employee insurance, minimum wage requirements, overtime, etc., and agrees to indemnify,

save, and hold the State of Missouri, its officers, agents, and employees, harmless from and against, any and all loss; cost (including attorney fees); and damage of any kind related to such matters.

2.10 Estimated Quantities:

2.10.1 The quantities indicated in this Invitation for Bid are estimates that pertain to the total aggregate quantities that may be ordered throughout the stated contract period. The estimates do not indicate single order amounts unless otherwise stated. The State of Missouri makes no guarantees about single order quantities or total aggregate order quantities.

2.11 Coordination:

2.11.1 The contractor shall fully coordinate all contract activities with those activities of the state agency. As the work of the contractor progresses, advice and information on matters covered by the contract shall be made available by the contractor to the state agency or the Division of Purchasing and Materials Management throughout the effective period of the contract.

2.12 Insurance:

2.12.1 The contractor shall understand and agree that the State of Missouri cannot save and hold harmless and/or indemnify the contractor or employees against any liability incurred or arising as a result of any activity of the contractor or any activity of the contractor's employees related to the contractor's performance under the contract. Therefore, the contractor must acquire and maintain adequate liability insurance in the form(s) and amount(s) sufficient to protect the State of Missouri, its agencies, its employees, its clients, and the general public against any such loss, damage and/or expense related to his/her performance under the contract. General and other non-professional liability insurance shall include an endorsement that adds the State of Missouri as an additional insured. Self-insurance coverage or another alternative risk financing mechanism may be utilized provided that such coverage is verifiable and irrevocably reliable and the State of Missouri is protected as an additional insured.

2.13 Termination:

2.13.1 The Division of Purchasing and Materials Management reserves the right to terminate the contract at any time, for the convenience of the State of Missouri, without penalty or recourse, by giving written notice to the contractor at least thirty (30) calendar days prior to the effective date of such termination. The contractor shall be entitled to receive compensation for services and/or supplies delivered to and accepted by the State of Missouri pursuant to the contract prior to the effective date of termination.

2.14 Participation by Other Organizations:

2.14.1 The contractor must comply with any Organization for the Blind/Sheltered Workshop participation levels committed to in the contractor's awarded bid.

2.14.2 The contractor shall prepare and submit to the Division of Purchasing and Materials Management a report detailing all payments made by the contractor to Organizations for the Blind/Sheltered Workshops participating in the contract for the reporting period. The contractor must submit the report on a monthly basis, unless otherwise determined by the Division of Purchasing and Materials Management.

2.14.3 The Division of Purchasing and Materials Management will monitor the contractor's compliance in meeting the Organizations for the Blind/Sheltered Workshop participation levels committed to in the contractor's awarded bid. If the contractor's payments to the participating entities are less than the amount committed, the state may cancel the contract and/or suspend or debar the contractor from participating in future state procurements, or retain payments to the contractor in an amount equal to the value of the participation commitment less actual payments made by the contractor to the participating entity. If the Division of Purchasing and Materials Management determines that the contractor becomes compliant with the commitment, any funds retained as stated above, will be released.

2.14.4 If a participating entity fails to retain the required certification or is unable to satisfactorily perform, the contractor must obtain other organizations for the blind/sheltered workshops to fulfill the participation requirements committed to in the contractor's awarded bid.

a. The contractor must obtain the written approval of the Division of Purchasing and Materials Management for any new entities. This approval shall not be arbitrarily withheld.

b. If the contractor cannot obtain a replacement entity, the contractor must submit documentation to the Division of Purchasing and Materials Management detailing all efforts made to secure a replacement. The Division of Purchasing and Materials Management shall have sole discretion in determining if the actions taken by the contractor constitute a good faith effort to secure the required participation and whether the contract will be amended to change the contractor's participation commitment.

2.14.5 No later than 30 days after the effective date of the contract's expiration date the contractor must submit an affidavit to the Division of Purchasing and Materials Management. The affidavit must be signed by the director or manager of the participating Organizations for the Blind/Sheltered Workshop verifying provision of products and/or services and compliance of all contractor payments made to the Organizations for the Blind/Sheltered Workshops. The contactor may use the affidavit available on the Division of Purchasing and Materials Management's website at http://content.oa.mo.gov/sites/default/files/bswaffidavit.doc or another affidavit providing the same information.

2.15 Contractor's Personnel:

2.15.1 The contractor shall only employ personnel authorized to work in the United States in accordance with applicable federal and state laws. This includes but is not limited to the Illegal Immigration Reform and Immigrant Responsibility Act (IIRIRA) and INA Section 274A.

2.15.2 If the contractor is found to be in violation of this requirement or the applicable state, federal and local laws and regulations, and if the State of Missouri has reasonable cause to believe that the contractor has knowingly employed individuals who are not eligible to work in the United States, the state shall have the right to cancel the contract immediately without penalty or recourse and suspend or debar the contractor from doing business with the state.

2.15.3 The contractor shall agree to fully cooperate with any audit or investigation from federal, state, or local law enforcement agencies.

3. SPECIFIC CONTRACTUAL AND PERFORMANCE REQUIREMENTS

3.1 General:

3.1.1 The contractor shall provide food service equipment on an as needed, if needed basis as ordered by the state agency. The contractor must comply with all mandatory requirements and specifications presented herein pertaining to provision of food service equipment.

3.2 Substitutions:

3.2.1 The contractor shall not substitute any item(s) that has been awarded to the contractor without the prior written approval of the Division of Purchasing and Materials Management.

3.2.2 In the event an item becomes unavailable, the contractor shall be responsible for providing a suitable substitute item. The contractor's failure to provide an acceptable substitute may result in cancellation or termination of the contract.

3.2.3 Any item substitution must be a replacement of the contracted item with a product of equal or better capabilities and quality, and with equal or lower pricing. The contractor shall understand that the state reserves the right to allow the substitution of any new or different product/system offered by the contractor.

The Division of Purchasing and Materials Management shall be the final authority as to acceptability of any proposed substitution.

3.2.4 Any item substitution shall require a formal contract amendment authorized by the Division of Purchasing and Materials Management prior to the state acquiring the substitute item under the contract.

3.2.5 The state may choose not to compel an item substitution in the event requiring a substitution would be deemed unreasonable in the sole opinion of the State of Missouri. The contractor shall not be relieved of substituting a product in the event of manufacturer discontinuation or other reason simply for reasons of unprofitability to the contractor.

3.3 Replacement of Damaged Product:

3.3.1 The contractor shall be responsible for replacing any item received in damaged condition at no cost to the State of Missouri. This includes all shipping costs for returning non-functional items to the contractor for replacement.

3.4 Delivery Performance:

3.4.1 The contractor and/or the contractor's subcontractor(s) shall deliver products in accordance with the contracted delivery times stated herein to the state agency upon receipt of an authorized purchase order or P-card transaction notice. Delivery shall include unloading shipments at the state agency's dock or other designated unloading site as requested by the state agency. All orders must be shipped F.O.B. Destination, Freight Prepaid and Allowed. All orders received on the last day of the contract, must be shipped at the contract price. All deliveries must be coordinated with the state agency.

3.4.2 The contractor must contact the receiving institution a minimum of one (1) business day prior to delivery to ensure that personnel will be available at time of delivery.

3.4.3 Institutions may have specific times that deliveries can be accepted based on security procedures. The contractor shall coordinate delivery times with the receiving institution. A delivery arriving during a time the institution does not accept deliveries will be delayed or refused. Any additional cost for redelivery shall be the responsibility of the contractor.

3.4.4 Delivery must not be made on official state holidays. A list of official state holidays may be found on the State of Missouri website at http://www.oa.mo.gov/pers/hoursofwork.htm .

3.5 Contractor's Employees:

3.5.1 All of the contractor's employees and agents providing service in the facility must be at least 18 years of age. A Missouri Uniform Law Enforcement System (MULES) or other background investigation may be required on the contractor's employees and agents before allowing entry into the institution. Such investigation shall be equivalent to investigations required of all personnel employed by the Department. The institution shall have the right to deny access into the institution for any of the contractor's employees or agents for any reason. Such denial shall not relieve the contractor of any requirements of the contract.

3.5.2 Contractor's employees and agents under active federal or state felony or misdemeanor supervision must receive written division director approval prior to performing services on a Department contract. Contractors/employees/agents with prior felony convictions and not under active supervision must receive written division director approval in advance.

3.5.3 The contractor, its employees, and others acting under the contractor's control, shall at all times observe and comply with all applicable state statues, Department rules, regulations, guidelines, internal management policy and procedures, and general orders of the Department that are applicable, regarding operations and activities in and about all Department property. Furthermore, the contractor, its agents or employees, shall not obstruct the Department nor any of its designated officials from performing their duties in response to court orders or in the

maintenance of a secure and safe correctional environment. The contractor shall comply with the Department's policy and procedures relating to employee conduct.

a. The Department has a zero tolerance policy for any form of sexual misconduct to include staff/contractor/volunteer on offender or offender on offender sexual harassment, sexual assault, sexual abusive contact and consensual sex. Any contractor or contractor's employee or agent who witnesses sexual abuse or sexual harassment must immediately report it to the warden. A contractor or contractor's employee or agent who engages in, fails to report, or knowingly condones sexual harassment or sexual contact with or between offenders shall be grounds for canceling the contract and may subject the contractor or contractor's employee or agent to criminal prosecution.

b. Any contractor, contractor's employee or agent who has engaged in sexual abuse in a prison, jail, lockup, community confinement facility, juvenile facility or other institution shall be denied access into the institution.

3.6.4 The contractor and/or contractor's employees and agents shall not interact with the offenders except as is necessary to perform the requirements of the contract. The contractor and/or contractor's employees and agents shall not give anything to nor accept anything from the offenders except in the normal performance of the contract.

4. BIDDERS' INSTRUCTIONS

4.1 Contact:

4.1.1 Any and all communication from bidders regarding specifications, requirements, competitive bid process, etc. related to the bid document must be referred to the Buyer of Record identified on the first page of this document. Such communication should be received at least ten (10) calendar days prior to the official bid opening date.

4.2 Business Compliance:

4.2.1 The bidder must be in compliance with the laws regarding conducting business in the State of Missouri. The bidder certifies by signing the signature page of this original document and any amendment signature page(s) or by submitting an on-line bid that the bidder and any proposed subcontractors either are presently in compliance with such laws or shall be in compliance with such laws prior to any resulting contract award. The bidder shall provide documentation of compliance upon request by the Division of Purchasing and Materials Management. The compliance to conduct business in the state shall include but may not be limited to:

- Registration of business name (if applicable)
- Certificate of authority to transact business/certificate of good standing (if applicable)
- Taxes (e.g., city/county/state/federal)
- State and local certifications (e.g., professions/occupations/activities)
- Licenses and permits (e.g., city/county license, sales permits)
- Insurance (e.g., worker's compensation/unemployment compensation)

4.3 On-Line Bid:

4.3.1 If a registered bidder is responding electronically through the On-Line Bidding/Vendor Registration System website, in addition to completing the on-line pricing, the registered bidder should submit completed exhibits, forms, and other information concerning the bid (including completed Pricing Pages, for renewal period pricing) as an attachment to the electronic bid. Instructions on how a registered vendor responds to a bid on-line are available on the On-Line Bidding/Vendor Registration System website at: https://www.moolb.mo.gov.

4.3.2 The exhibits, forms, and pricing pages provided herein can be saved into a word processing document, completed by the registered bidder, and then sent as an attachment to the electronic submission. Other requested, required, or additional information may also be sent as an attachment. Additional instructions for

submitting electronic attachments are on the On-Line Bidding/Vendor Registration System website. Be sure to include the bid number, company name, and a contact name on any electronic attachments.

4.3.3 In addition, the registered bidder may submit the exhibits, forms, Pricing Pages, etc., through mail or courier service. However, any such submission must be received prior to the specified closing date and time.

4.3.4 Registered bidders submitting electronic and hard copy bid responses which are not identical should explain which response(s) is(are) valid for the state's consideration. In the absence of such explanation, the state reserves the right to evaluate the response which serves its best interest.

4.4 Open Competition:

4.4.1 Any manufacturer's name, trade names, brand names, information and/or catalog numbers listed in a specification and/or requirement are for informational purposes only and are not intended to limit competition.

4.4.2 The bidder may offer any brand of product that meets or exceeds the specifications. In addition to identifying the manufacturer's name and model number, the bidder must explain in detail how their product meets or exceed the specifications. Bids, which do not comply with the requirement and the specifications, are subject to rejection without clarification.

4.5 Description of Product:

4.5.1 The bidder should present a detailed description of all products and services proposed in the response to this Invitation for Bid. It is the bidder's responsibility to make sure all products proposed are adequately described in order to conduct an evaluation of the bid to insure its compliance with mandatory technical specifications. It should not be assumed that the evaluator has specific knowledge of the products proposed; however, the evaluator does have sufficient technical background to conduct an evaluation when presented complete information.

4.6 Preprinted Marketing Materials:

4.6.1 The bidder may submit preprinted marketing materials with the bid. However, the bidder is advised that such brochures normally do not address the needs of the evaluators with respect to the technical evaluation process and the specific responses which have been requested of the bidder. The bidder is strongly discouraged from relying on such materials in presenting products and services for consideration by the state.

4.7 Bid Detail Requirements and Deviations:

4.7.1 It is the bidder's responsibility to submit a bid that meets all mandatory specifications stated herein. The bidder should clearly identify any and all deviations from both the mandatory and desirable specifications stated in the IFB. Any deviation from a mandatory requirement may render the bid non-responsive. Any deviation from a desirable specification may be reviewed by the state as to its acceptability and impact on competition.

4.7.2 **Bidders should note**: A descriptive brochure of the model bid may not be acceptable as clear identification of deviations from the written specification.

4.8 Unit of Measure:

4.8.1 If the unit of measure specified on the attached pricing pages is different than the manner in which the bidder offers that item, then the unit of measure being proposed by the bidder must be clearly identified on the pricing page. All mathematical conversions should be shown by the bidder, and must be provided upon specific request from the Buyer.

4.8.2 In the cost evaluation, a unit price conversion will be done to fairly evaluate bid prices. However, for any resulting contract, the unit of measure bid will be the unit of measure awarded. Bidders are encouraged to

contact the Buyer **prior to** submission of their bid to discuss anticipated unit modifications. The bidder is cautioned that the State of Missouri reserves the right to clarify the unit of measure modification or to disqualify the bid for that line item if the unit of measure modification is not deemed appropriate or in the best interests of the State of Missouri.

4.9 Compliance with Terms and Conditions:

4.9.1 The bidder is cautioned when submitting pre-printed terms and conditions or other type material to make sure such documents do not contain other terms and conditions which conflict with those of the IFB and its contractual requirements. The bidder agrees that in the event of conflict between any of the bidder's terms and conditions and those contained in the IFB, that the IFB shall govern. Taking exception to the State's terms and conditions may render a bidder's bid non-responsive and remove it from consideration for award.

4.10 Prices

4.10.1 The bidder shall submit firm, fixed prices for one, some, or all of the item category groupings shown on the Pricing Pages. The bidder can choose to bid one, some or all categories listed on the Pricing Pages; however, the bidder must bid all line items within any given category. All pricing shall be considered firm for the duration of the contract period indicated on the Notice of Award page of the contract. All pricing shall be quoted FOB Destination, Freight Prepaid and Allowed.

4.11 Cost Evaluation:

4.11.1 The evaluation shall cover the original contract period and shall include all mandatory requirements. However, the State of Missouri reserves the right to evaluate optional items, if deemed necessary.

4.11.2 A separate cost evaluation shall be conducted for each category group. Each evaluation shall be conducted by multiplying the quoted price per item by the estimated quantity for that line item. The subtotals for all line items shall then be added together to determine the lowest overall bidder for that category.

4.12 Determination for Award:

4.12.1 The award shall be made to the lowest priced responsive bidder for each category group. Other factors that affect the determination of the lowest price responsive bidder include consideration of the Domestic Product Procurement Act, the Blind/Sheltered Workshop Preference, and the Missouri Service Disabled Veterans Preference explained in the paragraphs that follow.

4.12.2 The State of Missouri reserves the right to reject any bid which is determined unacceptable for reasons which may include but are not necessarily limited to: 1) failure of the bidder to meet mandatory general performance specifications; and/or 2) failure of the bidder to meet mandatory technical specifications; and/or, 3) receipt of any information, from any source, regarding delivery of unsatisfactory product or service by the bidder within the past three years. As deemed in its best interests, the State of Missouri reserves the right to clarify any and all portions of any bidder's offer.

4.13 The Domestic Product Procurement Act:

4.13.1 In accordance with the Domestic Product Procurement Act (hereinafter referred to as the Buy American Act) sections 34.350 to 34.359, RSMo, the bidder is advised that any goods purchased or leased by any public agency shall be manufactured or produced in the United States.

4.13.2 Bidders who can certify that goods or commodities to be provided in accordance with the contract are manufactured or produced in the United States or imported in accordance with a qualifying treaty, law, agreement, or regulation shall be entitled to a ten percent (10%) preference over bidders whose products do not qualify.

4.13.3 The requirements of the Buy American Act shall not apply if other exceptions to the Buy American mandate in section 34.353, RSMo, are met.

4.13.4 If the bidder claims there is only one line of the good manufactured or produced in the United States, subsection 2 of section 34.353, RSMo, or that one of the exceptions of subsection 3 of 34.353, RSMo, applies, the Executive Head of the Agency bears the burden of certification as required prior to the award of a contract.

4.13.5 In accordance with the Buy American Act, the bidder must provide proof of compliance with section 34.353, RSMo. Therefore the bidder should complete and return **Exhibit A**, certification regarding proof of compliance, with the bid. This document must be satisfactorily completed prior to an award of a contract.

4.13.6 If the lowest priced bidder qualifies as American-made or in the event all of the bidders or none of the bidders qualify for the Buy American preference, no further calculation is necessary. In the event the lowest priced bidder does not qualify for the Buy American Preference but other bidders do qualify, then the low bidder's price(s) is increased by 10% for those items not eligible for the Buy American Preference.

4.13.7 If any products and/or services offered under this IFB are being manufactured or performed at sites outside the United States, the bidder MUST disclose such fact and provide details with the bid.

4.14 Preference for Organizations for the Blind and Sheltered Workshops:

4.14.1 Pursuant to section 34.165, RSMo, and 1 CSR 40-1.050, a ten (10) bonus point preference shall be granted to bidders including products and/or services manufactured, produced or assembled by a qualified nonprofit organization for the blind established pursuant to 41 U.S.C. sections 46 to 48c or a sheltered workshop holding a certificate of approval from the Department of Elementary and Secondary Education pursuant to section 178.920, RSMo.

a. In order to qualify for the ten bonus points, the following conditions must be met and the following evidence must be provided:

1) The bidder must either be an organization for the blind or sheltered workshop or must be proposing to utilize an organization for the blind/sheltered workshop as a subcontractor and/or supplier in an amount that must equal the greater of $5,000 or 2% of the total dollar value of the contract for purchases not exceeding $10 million.

2) The services performed or the products provided by the organization for the blind or sheltered workshop must provide a commercially useful function related to the delivery of the contractually-required service/product in a manner that will constitute an added value to the contract and shall be performed/provided exclusive to the performance of the contract. Therefore, if the services performed or the products provided by the organization for the blind or sheltered workshop is utilized, to any extent, in the bidder's obligations outside of the contract, it shall not be considered a valid added value to the contract and shall not qualify as participation in accordance with this clause.

3) If the bidder is proposing participation by an organization for the blind or sheltered workshop, in order to receive evaluation consideration for participation by the organization for the blind or sheltered workshop, the bidder must provide the following information with the bid:

- Participation Commitment - The bidder must complete **Exhibit B**, Participation Commitment, by identifying the organization for the blind or sheltered workshop and the commercially useful products/services to be provided by the listed organization for the blind or sheltered workshop. If the bidder submitting the bid is an organization for the blind or sheltered workshop, the bidder must be listed in the appropriate table on the Participation Commitment Form.

- Documentation of Intent to Participate – The bidder must either provide a properly completed **Exhibit C**, Documentation of Intent to Participate Form, signed and dated no earlier than the IFB issuance date by the organization for the blind or sheltered workshop proposed or must

provide a recently dated letter of intent signed and dated no earlier than the IFB issuance date by the organization for the blind or sheltered workshop which: (1) must describe the products/services the organization for the blind/sheltered workshop will provide and (2) should include evidence of the organization for the blind/sheltered workshop qualifications (e.g. copy of certificate or Certificate Number for Missouri Sheltered Workshop).

NOTE: If the bidder submitting the bid is an organization for the blind or sheltered workshop, the bidder is not required to complete **Exhibit C**, Documentation of Intent to Participate Form or provide a recently dated letter of intent.

b. A list of Missouri sheltered workshops can be found at the following Internet address:
http://dese.mo.gov/se/sw/se-sw-directories.html

c. The websites for the Missouri Lighthouse for the Blind and the Alphapointe Association for the Blind can be found at the following Internet addresses:
http://www.lhbindustries.com
http://www.alphapointe.org

d. Commitment – If the bidder's bid is awarded, the organization for the blind or sheltered workshop participation committed to by the bidder on **Exhibit B**, Participation Commitment, shall be interpreted as a contractual requirement.

4.14.2 The Blind/Sheltered Workshop Preference required under section 34.165, RSMo, allows for ten (10) bonus points to a qualifying vendor. If the lowest priced bidder qualifies for the preference, or in the event none of the bidders qualify for the preference, no further calculation is necessary.

4.14.3 In the event the lowest priced bidder does not qualify for the preference but other bidders do, then the following evaluation point formula shall apply to determine cost evaluation points:

Lowest Responsive Bidder's Price / Compared Bidder's Price	x	200 Maximum Cost Evaluation Points	=	Awarded Cost Evaluation Points

4.15 Missouri Service-Disabled Veteran Business Preference:

4.15.1 Pursuant to section 34.074, RSMo, and 1 CSR 40-1.050, a three (3) bonus point preference shall be granted to bidders who qualify as Missouri service-disabled veteran business enterprises and who complete and submit **Exhibit D**, Missouri Service-Disabled Veteran Business Enterprise Preference with the bid. If the bid does not include the completed **Exhibit D** and the documentation specified on **Exhibit D** in accordance with the instructions provided therein, no preference points will be applied.

4.15.2 If the lowest priced bidder qualifies for the preference, or in the event none of the bidders qualify for the preference, no further calculation is necessary.

4.15.3 In the event the lowest priced bidder does not qualify for the preference but other bidders do, then the following evaluation point formula shall apply to determine cost evaluation points:

Lowest Responsive Bidder's Price / Compared Bidder's Price	x	200 Maximum Cost Evaluation Points	=	Awarded Cost Evaluation Points

PRICING PAGE

The products shall conform to the specifications contained herein. The bidder can choose to bid one, some or all of the categories specified below; however, the bidder must submit a firm, fixed unit price for all items within a category. All prices shall be considered firm and fixed and shall include all packing, handling, shipping and freight charges FOB Destination, Freight Prepaid and Allowed.

LINE ITEM	MANDATORY SPECIFICATIONS	ESTIMATED QUANTITY	UNIT	UNIT PRICE
CATEGORY 1: COFFEE URNS				
001	C/S Code: 16599 *Cafeteria and Kitchen Equipment, Commercial*	1	EA	$ 7170.60

Coffee Urn, Electric

- Twin ten (10) gallon liners with independent brewing systems
- Permanent stainless steel brew baskets
- Automatic air agitation for each liner
- Hot water dispenser
- Lockable, hinged brew head covers
- Indicator lights to include water hot light
- Flanged feet with screw holes for counter top mounting
- Tamper resistant: Controls inside lockable control box, on/off switch behind lockable panel, control switches protected behind tamper resistant cover plate
- 480v/3ph power supply – not to exceed 30 AMPS
- UL & NSF Compliant

90 day Labor Warranty — State Labor Warranty 90 DAYS LABOR

1 year Parts Warranty — State Parts Warranty 1 YEAR PARTS

Brand Reference: Grindmaster Model 67710(E) or equivalent

State Brand/Model Bid: GRINDMASTER MODEL 67710 (E)

Delivery to the following address:
Eastern Reception, Diagnostic Correctional Center
2727 Highway K
Bonne Terre, MO 63628
573-358-5516

002	C/S Code: 16599 *Cafeteria and Kitchen Equipment, Commercial*	1	EA	$ 2698.67

Coffee Urn, Electric

- Twin 6 Gallon liners with independent brewing systems
- Stainless steel exterior
- Adjustable by-pass system
- Automatic refill
- Automatic agitation
- Cycle stop switch
- Temperature control
- Thermometer

- Drip proof faucet
- Hot water dispenser
- Over flow tube
- Two brew buttons
- Adjustable legs
- 120/208v/60HZ/1ph
- UL & NSF Compliant

90 Day Labor Warranty State Labor Warranty 90 DAYS LABOR

1 year Parts Warranty State Parts Warranty 1 YEAR PARTS

Brand Reference: Grindmaster Model FE200-N or equivalent

State Brand/Model Bid: GRINDMASTER MODEL FE200-N

Delivery to the following address:
Western Missouri Correctional Center
609 Pence Road
Cameron, MO 63628
816-632-1390

CATEGORY 2: MIXERS, PROCESSORS, AND CUTTERS

003 C/S Code: 16599 1 EA $ 3164.36
Cafeteria and Kitchen Equipment, Commercial

Food Cutter

- ½ HP Motor
- 14" Stainless steel bowl
- Aluminum housing
- Bowl cover safety feature(s)
- Cutlery grade stainless steel twin knife blades
- Bowl sensing switch to prevent operation without bowl
- 115v/60Hz/1ph power supply
- Minimum 5ft. cord with NEMA plug per NEMA configuration
- UL & NSF Compliant

1 year Parts and Labor Warranty State Parts and Labor Warranty 1 YEAR PARTS AND LABOR

Brand Reference: Univex, Model BC14 or equivalent

State Brand/Model Bid: UNIVEX MODEL BC14

Delivery to the following address:
Kansas City Community Release Center
651 Mulberry St.
Kansas City, MO 64101
Phone: 816-842-7467

004 C/S Code: 16599 1 EA $ 8293.94
Cafeteria and Kitchen Equipment, Commercial

Food Cutter

- 1 HP Motor
- 18" Stainless steel bowl
- Aluminum housing
- Bowl cover safety feature(s)
- Double cutlery grade stainless steel knives
- Bowl truck with handle
- 115v/60Hz/1ph power supply
- Minimum 5ft. cord with NEMA plug per NEMA configuration
- Correctional Package
- UL & NSF Compliant

1 year Parts and Labor Warranty State Parts and Labor Warranty 1 YEAR PARTS AND LABOR

Brand Reference: Hobart, Model 84186C or equivalent

State Brand/Model Bid: HOBART MODEL 84186C

Delivery to the following address:
Fulton Reception and Diagnostic Center
1393 State Road O
Fulton, MO 65251
Phone: 573-592-4040

005 C/S Code: 16599 1 EA $ 17284.46
Cafeteria and Kitchen Equipment, Commercial

Food Mixer

- 100 quart stainless steel bowl
- Stainless steel dough hook, wire whip, and beater
- Power bowl lift
- Minimum 4hp motor
- Alloy flat beater
- Bowl truck with handle
- 208v/60Hz/3ph power supply
- **Correctional Package**
- **UL & NSF Compliant**

1 year Parts and Labor Warranty State Parts and Labor Warranty 1 YEAR PARTS AND LABOR

Brand Reference: Varimixer W100PL or equivalent

State Brand/Model Bid: VARIMIXER W100PL

Delivery to the following address:
Boonville Correctional Center
1216 East Morgan Street
Boonville, MO 65233
Phone: 660-882-6521

006 C/S Code: 16599 1 EA $ 5326.06
Cafeteria and Kitchen Equipment, Commercial

Food Processor

- Compact design - maximum 27" deep counter fit
- Angled front
- Planetary drive
- Large full-size feed hopper
- All aluminum hopper and housing
- Double interlock switch
- Minimum plate speed of 430 RPMs
- Minimum 1 H.P. with overload protection
- Maximum 20 amp draw
- Decoring screw
- Red OFF, Green ON button
- Must accommodate Hobart FP350 accessories
- ¾" Dicer Blade accessory
- 120v/60Hz/1ph power supply
- 6' 3-conductor power cord (14AWG) with NEMA plug per NEMA configuration
- UL & NSF Compliant

1 year Parts and Labor Warranty State Parts and Labor Warranty 1 YEAR PARTS AND LABOR

Brand Reference: Hobart FP350 or equivalent

State Brand/Model Bid: HOBART FP350-1

Delivery to the following address:
Chillicothe Correctional Center
3151 Litton Road
Chillicothe, MO 64601
Phone: 660-646-4032

007 C/S Code: 16599 3 EA $ 11740.11
Cafeteria and Kitchen Equipment, Commercial

Food Processor, Floor Model

- Gear transmission
- 2-speed motor
- Anodized aluminum housing
- Triple hopper/cover interlock
- Manual cylinder with manual push feed assembly
- Two stationary front legs and two rear legs with casters
- Processes up to 88 pounds per minute minimum
- **Must accommodate Hobart accessories**
- Minimum plate speeds between 200 and 400 RPMs
- Minimum 2 H.P. with overload protection
- 208/240v/60Hz/3ph power supply
- 6' 3-conductor power cord (16AWG) furnished with NEMA L15-20P locking type plug
- **Correctional Package**
- **UL & NSF Compliant**

1 year Parts and Labor Warranty State Parts and Labor Warranty 1 YEAR PARTS AND LABOR

Brand Reference: Hobart FP400 or equivalent
State Brand/Model Bid: HOBART FB400

Delivery to the following addresses:
1 Unit delivered to:
Tipton Correctional Center
619 N. Osage Avenue
Tipton, MO 65081
Phone: 660-433-2031

1 Unit delivered to:
Western Missouri Correction Center
609 Pence Road
Cameron, MO 64429
Phone: 816-632-1390

1 Unit delivered to:
Western Reception, Diagnostic & Correctional Center
3401 Faraon St.
St. Joseph, MO 64506
Phone: 816-387-2158

008 C/S Code: 16599 1 EA $6810.11
Cafeteria and Kitchen Equipment, Commercial

Peeler, Vegetable

- Minimum 1 HP Motor
- 50-60 pound peeling capacity in 1-3 minutes
- Cylindrical stainless steel base
- Multi-positional peeling chamber to enable rotations up to 90°
- Stainless steel peel trap and strainer
- Removable silicon carbide abrasive disk
- Lockable and removable hopper cover
- Self-cleaning/splash resistant inside water pattern
- On/off switch to right side of discharge chute
- Overload protection
- Water inlet at sufficient height to meet plumbing codes
- Height adjustable floor mountable feet
- Unit not to exceed 21" Wide, 27-1/2" Deep, 63" High (+/-2")
- 208v/60Hz/1ph power supply - 30 AMP maximum
- UL/NSF listed
- Correctional Package to include:
    - Security type tamper resistant screws and nuts

1 year Parts and Labor Warranty State Parts and Labor Warranty 1 YEAR PARTS AND LABOR

Brand Reference: Hobart, Model 6460C or equivalent

State Brand/Model Bid: HOBART MODEL 6460C

Delivery to the following address:
Northeast Correctional Center
13698 Airport Road
Bowling Green, MO 63334
Phone: 573-324-9975

009 C/S Code: 16599 1 EA $ 13956.00
Cafeteria and Kitchen Equipment, Commercial

Mixer, Floor Model

- 4 HP Motor
- 80 quart Stainless steel bowl
- Variable speed
- Power bowl lift
- Dough hook, wire whip, flat beater
- 208v/60Hz/3ph power supply
- Correctional Package
- UL/NSF listed

1 year Parts and Labor Warranty State Parts and Labor Warranty 1 YEAR PARTS AND LABOR

Brand Reference: Varimixer, Model W80A or equivalent

State Brand/Model Bid: GLOBE MODEL SP80PL

Delivery to the following address:
Fulton Reception and Diagnostic Center
1393 State Road O
Fulton, MO 65251
Phone: 573-592-4040

CATEGORY 3: FREEZERS

010 C/S Code: 16599 1 EA $ 3945.85
Cafeteria and Kitchen Equipment, Commercial

Freezer, Reach-In, Top Mount

- Electronic Controls
- Two half doors
- Stainless Steel front and sides
- Aluminum interior and floor
- Self closing doors with door locks
- One piece magnetic gaskets
- Must accommodate 18" x 26" or 12" x 20" pans
- 6" casters (Set of 4, two with brakes)
- 115v/60Hz/1ph power supply
- Minimum 10' power cord with NEMA plug per NEMA configuration
- Maximum measurements: 26 ½" W x 34 7/8" D x 85" H (including 6" casters) +/- ½"
- UL & NSF Compliant

1 year Parts and Labor Warranty State Parts and Labor Warranty 1 YEAR PARTS AND LABOR

5 year Compressor Part Warranty State Compressor Part Warranty 5 YEAR COMPRESSOR PART

Brand Referenced: Victory V-Series Model VF-SA-2D-HD or equivalent

State Brand/Model Bid: VICTORY V-SERIES MODEL VF-SA-2D-HD

Delivery to the following address:
Algoa Correctional Center
8501 No More Victims Road
Jefferson City, MO 65101
Phone: 573-751-3911

011 C/S Code: 16599 1 EA $ 3354.10
Cafeteria and Kitchen Equipment, Commercial

Freezer, Reach-In

- 2 sections
- Stainless Steel exterior front
- Full length stainless steel self-closing doors with locks
- Minimum 49 Cu. Ft. freezer capacity
- Door hinge right/left
- 6 adjustable, heavy duty shelves to include shelf clips
- Set of four 4" casters (2 with brakes)
- 115v/60Hz/1ph power supply
- Minimum 9' power cord with NEMA plug per NEMA configuration
- UL & NSF Compliant

1 year Parts and Labor Warranty State Parts and Labor Warranty 1 YEAR PARTS AND LABOR

4 year Compressor Part Warranty State Compressor Part Warranty 4 YEAR WARRANTY

Brand Reference: True Model T-49F or equivalent

State Brand/Model Bid: DELFIELD MODEL 6151XL-S

Delivery to the following address:
St. Louis Community Release Center
1621 N. 1st. Street
St. Louis, MO 63102
Phone: 314-877-0305

012 C/S Code: 16599 1 EA $ 9454.49
Cafeteria and Kitchen Equipment, Commercial

Freezer, Reach-In

- Electronic Controls
- 3 Sections
- Six (6) stainless steel self-closing solid half doors with locks
- Field reversible doors
- Three (3) adjustable epoxy coated wire shelves per section
- Four (4) shelf clips per shelf
- Stainless Steel exterior front and sides
- One piece magnetic gaskets

- 4" casters (Set of 4) - two (2) with brakes
- 208v/60Hz/1ph power supply for field wiring
- Maximum **Overall** Measurements not to exceed:
- 96" L
- 34" D
- 83" H with casters
- **UL & NSF Compliant**

2 year Parts and Labor Warranty State Parts and Labor Warranty 2 YEAR PARTS AND LABOR

5 year Compressor Part Warranty State Compressor Part Warranty 5 YEAR COMPRESSOR

Brand Reference: Hoshizaki America, Model CF-3B-HS or equivalent
State Brand/Model Bid: VICTORY MODEL FS-3D-S1-HD

Delivery to the following address:
St. Louis Community Release Center
1621 N. 1st. Street
St. Louis, MO 63102
Phone: 314-877-0305

CATEGORY 4: HEATED CABINETS AND CARTS

013 C/S Code: 16599 3 EA $ 6410.60
Cafeteria and Kitchen Equipment, Commercial

Heated Cabinet, Roll-In

- Stainless steel interior/exterior
- 2-Section self contained
- Full height self closing doors with locks
- Recessed door handles
- Maximum clear door width = 27-3/8"
- Maximum clear door height = 72 ½"
- 1 removable stainless steel ramp per door
- Electronic temperature control
- Humidity control
- Minimum 68 cubic foot capacity
- 208-240v/60Hz/1ph power supply for hard wire connection
- UL & NSF Compliant

Correctional Package shall include:

- Tamperproof security screws per unit
- Single locking hasp clip per door
- Stainless steel mesh cover (for top mounted units)

3 year Parts and Labor Warranty State Parts and Labor Warranty 3 YEAR PARTS AND LABOR

Brand Reference: Continental, Model DL2WI-SS-E or equivalent

State Brand/Model Bid: DELFIELD MODEL SSHR12-S-214

2 Units delivered to:
Eastern Reception, Diagnostic & Correctional Center
2727 Highway K
Bonne Terre, MO 63628
Phone: 573-358-5516

1 Unit delivered to:
Potosi Correctional Center
11593 State Highway O
Mineral Point, MO 63660
Phone: 573-438-6000

014 C/S Code: 16599 1 EA $ 6203.42
Cafeteria and Kitchen Equipment, Commercial

Heated Transport Cart

- Must hold a minimum of sixty 10" x 14" trays
- Stainless steel exterior and interior
- 6"- 8" casters - 2 swivel and 2 rigid
- Non-marking bumpers on all sides
- Insulated on all sides to include doors
- Non-removable flush mounted doors with 270° swing
- Lockable heavy-duty door latches
- 120v/60Hz/1ph power supply
- Minimum 6' power cord with NEMA plug per NEMA configuration
- Correctional Package
- UL & NSF Compliant

1 year Parts and Labor Warranty State Parts and Labor Warranty 1 YEAR PARTS AND LABOR

Brand Reference: Carter-Hoffmann, Model PH1420 or equivalent

State Brand/Model Bid: CARTER-HOFFMANN MODEL PH1420

Delivery to the following address:
Women's Eastern Reception, Diagnostic & Correctional Center
1101 East Highway 54
Vandalia, MO 63382
Phone: 573-594-6686

CATEGORY 5: ICE MACHINES AND DISPENSERS

015 C/S Code: 16599 2 EA $ 2808.60
Cafeteria and Kitchen Equipment, Commercial

Ice Dispenser, Countertop

- Manual fill
- 250 lb. storage capacity
- Maximum Measurements = 30"W x 32"D x 41"H (+/- 2")
- Lever dispense
- Built in water valve to dispense water
- Lighted merchandiser, leg kit, and drain kit
- Agitator to reduce ice jams and bridging
- 115v/60Hz/1ph power supply
- Minimum 6' power cord with NEMA plug per NEMA configuration
- Correctional Package
- UL & NSF Compliant

1 year Labor Warranty State Labor Warranty 1 YEAR LABOR

2 year Parts Warranty State Parts Warranty 2 YEAR PARTS

Brand Reference: Manitowoc/Servend Model S-250 or equivalent

State Brand/Model Bid: SERVEND MODEL S-250

Delivery to the following address:
Western Reception, Diagnostic & Correctional Center
3401 Faraon
St. Joseph, MO 64506
Phone: 816-387-2158

016 C/S Code: 16599 2 EA $ 5787.49
Cafeteria and Kitchen Equipment, Commercial

Ice Machine, Dispenser and Bin

- Air Cooled
- Minimum of 600 lb. of ice production per 24 hours
- Self contained condenser
- Stainless steel finish
- Minimum 250 lb. storage capacity ice dispenser with water dispenser, cup activated, to fit ice machine
- Easy to chew ice - nugget or cubelet
- 115v/60Hz/1ph power supply for ice machine and dispenser
- Minimum 6' power cords with NEMA plugs per NEMA configuration for ice machine and dispenser
- Kit for attaching ice maker to dispenser and any other kit(s) necessary to meet required specifications
- UL & NSE Compliant

3 year Parts and Labor Warranty State Parts and Labor Warranty 3 YEAR PARTS AND LABOR

5 year Parts Warranty on Compressor State Parts Warranty for Compressor 5 YEAR PARTS WARRANTY

Brand Reference: Scotsman, Model N0622A-1 with Dispenser/Bin Model ID250B-1 or equivalent

State Brand/Model Bid: MANITOWOC MODEL RN-0408A/ SERVEND MODELS S-250, SL16, 020001847

Delivery to the following address:
Women's Eastern Reception, Diagnostic & Correctional Center
1101 East Highway 54
Vandalia, MO 63382
Phone: 573-594-6686

CATEGORY 6: KETTLES

017 C/S Code: 16599 1 EA $ 14876.07
Cafeteria and Kitchen Equipment, Commercial

Kettle, Steam - Electric - Tilting

- Self-contained
- Type 304 or better stainless steel construction
- Type 316 stainless steel liner
- 2/3 jacketed 90° tilting kettle
- *Floor mountable with stainless steel legs*
- 60 gallon capacity
- Minimum steam jacket rating of 50 psi
- Embossed gallon markings
- Self-locking tilt mechanism and faucet bracket
- 2" draw-off valve
- Stainless steel enclosure for controls
- UL/NSF listed
- 480v/60Hz/3ph power supply
- Controls to include:
  - power "on" light
  - *temperature control*
  - vacuum/pressure gauge
  - pressure relief safety valve
  - low water light
  - low water shut-off
- Correctional Package to include:
  - Security type tamper resistant fasteners with tack welds
  - Controls protected by lockable cover
  - Stainless steel step cover over draw-off valve with chain

1 year Parts and Labor Warranty State Parts and Labor Warranty 1 YEAR PARTS AND LABOR

Brand Reference: Vulcan-Hart, Model K60ELT or equivalent

State Brand/Model Bid: SOUTHBEND MODEL KELT-60

Delivery to the following address:
Crossroads Correctional Center
1115 E. Pence Road
Cameron, MO 64429
Phone: 816-632-2727

018 C/S Code: 16599 2 EA $ 15862.12
Cafeteria and Kitchen Equipment, Commercial

Kettle, Steam - Electric - Tilting

- Self-contained
- Type 304 or better stainless steel construction
- Type 316 stainless steel liner
- 2/3 jacketed tilting kettle
- Full body insulation between kettle jacket and outer casing
- Floor mountable with adjustable stainless steel legs
- 60 gallon capacity
- Must have field replaceable heating elements
- Stainless steel lift-off cover
- 3" compression draw-off valve
- 2 piece stainless steel draw-off interior strainer package, 1/8" & ¼"

- Thermostat temperature control
- Vacuum/pressure gauge
- Pressure relief safety valve
- Air eliminator valve
- Low water light
- Low water shut-off
- Heating element KW rating minimum of 33 KW
- 480v/60Hz/3ph power supply - 50 AMP MAX
- UL/NSF listed
- Unit measurements not to exceed:
  - 51-3/4" wide
  - 52 ½" deep
- Correctional Package to include:
  - Security type tamper resistant fasteners with tack welds
  - Controls protected by lockable cover
  - Stainless steel step cover over draw-off valve with chain

1 year Parts and Labor Warranty State Parts and Labor Warranty 1 YEAR PARTS AND LABOR

Brand Reference: Legion, Model TWE-60 or equivalent

State Brand/Model Bid: SOUTHBEND KELT-60

Delivery to the following address:
Northeast Correctional Center
13698 Airport Road
Bowling Green, MO 63334
Phone: 573-324-9975

019 C/S Code: 16599 1 EA $ 12984.82
Cafeteria and Kitchen Equipment, Commercial

Kettle, Steam - Electric - Stationary

- Self-contained
- Type 304 or better stainless steel construction
- Type 316 stainless steel liner
- 2/3 jacketed stationary kettle
- Spring assist cover
- Floor mountable with stainless steel legs
- 60 gallon capacity
- Minimum steam jacket rating of 50 psi
- Embossed gallon markings
- 2" compression tangent draw-off valve with perforated strainer
- Stainless steel enclosure for controls
- UL/NSF listed
- 480v/60Hz/3ph power supply
- Controls to include:
  - power "on" light
  - temperature control
  - vacuum/pressure gauge
  - pressure relief safety valve
  - low water light

- low water shut-off
- Correctional Package to include:
  - Security type tamper resistant fasteners with tack welds
  - Controls protected by lockable cover
  - Stainless steel step cover over draw-off valve with chain

1 year Parts and Labor Warranty State Parts and Labor Warranty 1 YEAR PARTS AND LABOR

Brand Reference: Vulcan-Hart, Model K60EL or equivalent

State Brand/Model Bid: Cleveland Range, KEL-60

Delivery to the following address:
Southeast Correctional Center
300 E. Pedro Simmons Drive
Charleston, MO 63834
Phone: 573-683-4409

020 C/S Code: 16599 1 EA $ 15565.46
Cafeteria and Kitchen Equipment, Commercial

Kettle, Steam - Electric - Stationary

- Type 304 or better stainless steel construction
- Type 316 stainless steel liner
- Fully steam jacketed stationary kettle
- Spring assist cover
- Floor mountable with stainless steel legs
- 100 gallon capacity
- Graduated measuring rod
- Faucet bracket
- 3" plug draw-off valve with perforated strainer
- Stainless steel enclosure for controls
- UL/NSF listed
- 480v/60Hz/3ph power supply
- Minimum input 36 Kw
- Controls to include:
  - on/off switch
  - thermostat control
  - vacuum/pressure gauge
  - pressure relief safety valve
  - low water light
  - low water shut-off
- Correctional Package to include:
  - Security type tamper resistant fasteners with tack welds
  - Controls protected by lockable cover
  - Stainless steel step cover over draw-off valve with chain

1 year Parts and Labor Warranty State Parts and Labor Warranty 1 YEAR PARTS AND LABOR

Brand Reference: Vulcan-Hart, Model ET100 or equivalent

State Brand/Model Bid: SOUTHBEND MODEL KELS-100

Delivery to the following address:
Fulton Reception, Diagnostic and Correctional Center
1393 Highway O
Fulton, MO 65251
Phone: 573-592-4040

021 C/S Code: 16599 2 EA $ 15605.99
Cafeteria and Kitchen Equipment, Commercial

Kettle, Steam - Natural Gas - Tilting

- Self-contained, gas fired
- Type 304 or better stainless steel construction
- Type 316 stainless steel liner
- Fully insulated 2/3 jacketed steam kettle with 90° tilt
- Spring assisted cover
- Floor mountable with stainless steel legs
- 20 gallon capacity
- Minimum steam jacket rating of 50 psi
- Embossed gallon markings
- Pour strainer
- UL/NSF listed
- 120v/50/60Hz/1ph power supply
- Minimum 6' cord with NEMA plug per NEMA configuration
- Controls to include:
    - direct immersion thermostat
    - water sight glass
    - cooking light
    - electronic ignition
    - pressure gauge
- Safety features to include:
    - pressure relief safety valve
    - pressure switch
    - low water shut-off
    - safety gas shut-off valve
- Correctional Package to include:
    - Security type tamper resistant fasteners with tack welds
    - Controls protected by lockable cover

1 year Parts and Labor Warranty State Parts and Labor Warranty 1 YEAR PARTS AND LABOR

Brand Refernce: Southbend, Model KTLG20 or equivalent

State Brand/Model Bid: SOUTHBEND KTLG-20

Delivery to the following address:
Kansas City Community Release Center
651 Mulberry Street
Kansas City, MO 64101
Phone: 816-842-7467

022 C/S Code: 16599 1 EA $ 12153.80
Cafeteria and Kitchen Equipment, Commercial

Kettle - Direct Steam - Stationary

- Direct steam fully jacketed stationary kettle
- Type 304 or better stainless steel construction
- Spring assisted stainless steel cover
- Floor mountable with stainless steel adjustable legs
- 80 gallon capacity
- Gallon etchings
- Type 316 stainless steel jacket liner
- Minimum steam jacket rating of 35 psi
- Minimum input = 3.4 BHP
- Graduated measuring rod
- Stainless steel faucet bracket
- Single pantry lead free faucet to include 12" swivel spout 4" and 12" riser
- 3" plug draw-off valve with perforated strainer
- Minimum 15 PSI relief valve
- Vacuum relief valve
- Main and simmer steam supply valves
- Steam pressure gauge and thermostatic steam trap
- UL/NSF listed
- Correctional Package to include:
    - Security type tamper resistant fasteners with tack welds
    - Stainless steel step cover over draw-off valve with chain

1 year Parts and Labor Warranty State Parts and Labor Warranty 1 YEAR PARTS AND LABOR

Brand Reference: Vulcan-Hart, Model SL80 or equivalent

State Brand/Model Bid: SOUTHBEND KDLT-80

Delivery to the following address:
Tipton Correctional Center
619 N. Osage Avenue
Tipton, MO 65081
Phone: 660-433-2031

023 C/S Code: 16599 2 EA $ 11058.99
Cafeteria and Kitchen Equipment, Commercial

Kettle - Direct Steam - Tilting

- Direct steam 2/3 jacketed tilting kettle
- Type 304 or better stainless steel construction
- Counter balanced stainless steel cover
- Floor mountable with stainless steel adjustable legs
- 80 gallon capacity
- Gallon etchings
- Type 316 stainless steel jacket liner
- Minimum steam jacket rating of 25 psi
- Double pantry faucet, faucet bracket, and 1/8" strainer disc
- 3" draw-off valve

- Lip strainer
- UL/NSF listed

1 year Parts and Labor Warranty State Parts and Labor Warranty 1 YEAR PARTS AND LABOR

Brand Reference: Blodgett, Model 80DS-KLT or equivalent

State Brand/Model Bid: SOUTHBEND MODEL KDLT-80

Delivery to the following address:
Women's Eastern Reception, Diagnostic and Correctional Center
1101 East Highway 54
Vandalia, MO 63382
Phone: 573-594-6686

CATEGORY 7: REFRIGERATORS

024 C/S Code: 16599 2 EA $ 8761.65
Cafeteria and Kitchen Equipment, Commercial

Refrigerator, Pass-Through

- 2 sections
- Stainless Steel exterior and interior
- Self contained
- Full length solid stainless steel self-closing doors (front and back)
- Door locks
- 3 adjustable wire shelves per section
- Set of four 4-5" heavy duty casters (2 with brakes)
- Rear left doors hinge on right
- Rear right doors hinge on right
- 115v/60Hz/1ph power supply
- Minimum 8' power cord with NEMA plug per NEMA configuration
- Unit not to exceed 52" W x 37" D x 83" H (including casters) **(+/-1")**
- UL/NSF listed
- Correctional Package

1 year Parts and Labor Warranty State Parts and Labor Warranty 1 YEAR PARTS AND LABOR

5 year Compressor Part Warranty State Compressor Part Warranty 5 YEAR COMPRESSOR

Brand Reference: Traulsen Model RH232NP-COR01 or equivalent

State Brand/Model Bid: DELFIELD RPT2-SS221-214

Delivery to the following address:
Crossroads Correctional Center
1115 E. Pence Road
Cameron, MO 64429
Phone: 816-632-2727

025 C/S Code: 16599 1 EA $2725.22
Cafeteria and Kitchen Equipment, Commercial

Refrigerator, Reach-In

- Minimum 49 cubic foot capacity
- 2-Section
- Stainless steel exterior cabinet front
- Full length stainless steel doors with recessed door handles
- Self-sealing doors with door locks
- Exterior temperature display
- Self contained refrigeration system
- Three (3) adjustable heavy duty shelves per section
- Casters
- 115v/60Hz/1ph power supply
- Minimum 8' power cord with NEMA plug per NEMA configuration
- Unit not to exceed 54" W x 29" D x 83" H (+/- 1") with casters
- UL/NSF listed

3 year Parts and Labor Warranty State Parts and Labor Warranty 3 YEAR PARTS AND LABOR

5 year Compressor Part Warranty State Compressor Part Warranty 5 YEAR COMPRESSOR PART

Brand Reference: True, Model T-49 or equivalent

State Brand/Model Bid: DELFIELD MODEL 6051XL-S

Delivery to the following address:
St. Louis Community Release Center
1621 N. 1st. Street
St. Louis, MO 63102
Phone: 314-877-0300

026 C/S Code: 16599 1 EA $4237.91
Cafeteria and Kitchen Equipment, Commercial

Refrigerator, Roll-In

- 1 section
- Stainless steel cabinet front
- Self contained refrigeration system
- Non-electric condensate evaporator
- Full length solid stainless steel self-closing door with cylinder lock
- Removable ramp
- Must accept carts up to 23" w x 28" d x 64" h
- 115v/60Hz/1ph power supply - 20 Amp maximum
- Minimum 8' power cord with NEMA plug per NEMA configuration
- Correctional Package
- UL/NSF listed

1 year Parts and Labor Warranty State Parts and Labor Warranty 1 YEAR PARTS AND LABOR

5 year Compressor Part Warranty State Compressor Part Warranty 5 YEAR COMPRESSOR PART

Brand Reference: Victory, Model RIA-1D-S1 or equivalent

State Brand/Model Bid: VICTORY MODEL RIA-1D-S1

Delivery to the following address:
Potosi Correctional Center
11593 State Highway O
Mineral Point, MO 63660
Phone: 573-438-6000

CATEGORY 8: SERVING COUNTERS

027 C/S Code: 16599 3 EA $ 5410.66
Cafeteria and Kitchen Equipment, Commercial

Serving Counter - Mobile - Heated

- Stainless steel top and exterior
- Minimum 14-gauge galvanized bottom
- Enclosed base with no under storage
- Single door mechanical access to interior mounted controls furnished with a stainless steel hasp lock
- Six (6) die stamped full-size heated serving wells each capable of holding a 12" x 20", 6" deep pan w/o drains
- Each hot well to be independently control wired to an adjustable control switch with indicator light
- Each hot well shall be individually equipped with a heating element rated at 1000 watts
- 5" diameter swivel non-marking casters with brakes
- Unit shall be inter-wired and furnished with a 10' cord and NEMA 14-50P plug
- 208/230v/60Hz/1ph - 32 amps maximum
- UL & NSF Compliant
- Special Instructions:
  - Two counters required at 33-3/4" overall height
  - One counter required at 34-3/4" overall height
- Correctional Package must include:
- Tamper proof screws
- Padlock hasps
- Security control covers

Minimum Warranty:
1 year Labor Warranty
90 Day Parts Warranty

State Labor Warranty 1 YEAR LABOR
State Parts Warranty 90 DAY PARTS

Brand Reference: Shellysteel™ by Delfield, Model SH-6-NU or equivalent

State Brand/Model Bid: SHELLYSTEEL BY DELFIELD MODEL SH-6-NU

Delivery to the following address:
Western Reception, Diagnostic & Correctional Center
3401 Faraon
St. Joseph, MO 64506
Phone: 816-387-2158

028 C/S Code: 16599 3 EA $6843.87
Cafeteria and Kitchen Equipment, Commercial

Serving Counter - Mobile - Refrigerated

- Minimum 18 gauge stainless steel exterior
- Minimum 14-gauge galvanized bottom and top
- Enclosed base
- Six (6) die stamped full-size mechanically cooled serving wells each capable of holding a 12" x 20" x 4" pan
- Pans shall recess 2" from top edge of counter and rest on cold pan
- Temperatures shall be maintained between 33° - 41° F at 86 degrees ambient room temperature
- Cold pans shall be fully insulated with foamed, in place, polyurethane insulation with a 1" drain and valve
- Self contained condensing unit shall be ¼ HP at minimum with adjustable cold pan pressure control
- Condensing unit shall use environmentally friendly HFC-404A refrigerant
- Single door mechanical access to interior mounted controls
- 5" diameter swivel non-marking casters with brakes
- Unit shall be inter-wired and furnished with a 10' cord and NEMA 5-15P plug
- 115v/60Hz/1ph
- UL & NSF Compliant
- Special Instructions:
  - Two counters required at 33-3/4" overall height
  - One counter required at 34-3/4" overall height
- Correctional Package must include:
  - Tamper proof screws
  - Padlock hasps
  - Security control covers

Minimum Warranty:

1 year Labor Warranty
90 Day Parts Warranty

State Labor Warranty I YEAR LABOR
State Parts Warranty 90 DAY PARTS

Brand Reference: Shellysteel™ by Delfield, Model SCSC-96-B or equivalent

State Brand/Model Bid: SHELLYSTEEL BY DELFIELD MODEL SCSC-96-B

Delivery to the following address:
Western Reception, Diagnostic & Correctional Center
3401 Faraon
St. Joseph, MO 64506
Phone: 816-387-2158

CATEGORY 9: STEAMERS

029 C/S Code: 16599 1 EA $11113.32
Cafeteria and Kitchen Equipment, Commercial

Steamer, Convection - Electric

- Two compartment on cabinet base
- Stainless steel exterior
- Two stainless steel cooking compartments
- 10 pan capacity
- Stainless steel steam generator
- Separate on/off timer with constant steam setting for each steam cavity
- Heavy duty doors with door latch mechanisms
- 6" adjustable stainless steel legs with flanged feet
- Must accommodate 12" x 20" pans
- 208v/60Hz/3ph power supply
- UL & NSF Compliant
- Options to include:
  - Professional Control Package - Superheated Steam System
  - Second year extended limited parts and labor warranty
- Accessories to include:
  - 4 - 12" w x 2 ½" d x 20"l - solid perforated stainless steel pans
  - 4 - 12" w x 4" d x 20" l - solid perforated stainless steel pans
  - Water treatment system

2 year Parts and Labor Warranty State Parts and Labor Warranty 2 YEAR PARTS AND LABOR

Brand Reference: Vulcan C24EA Floor Series, Model C243A10-DLX *or equivalent*

State Brand/Model Bid: SOUTHBEND MODEL SX-55EC

Delivery to the following address:
St. Louis Community Release Center
1621 N. 1st. Street
St. Louis, MO 63102
Phone: 314-877-0305

030 C/S Code: 16599 1 EA $ 15430.08
Cafeteria and Kitchen Equipment, Commercial

Steamer, Convection - Natural Gas

- Double stacked connected unit mounted on a stainless steel stand with casters
- Boilerless steam
- Cook mode and variable temperature hold mode
- Each unit powered by burner rated at 60,000 btu/hr minimum
- Digital controls with independent timer
- Low water, high water, overtemp warning lights and auto shut-off feature
- No water filtration or treatment required
- Each unit must accommodate six 12 x 20 x 2.5" pans
- 115/120v/60Hz/1ph power supply
- Minimum 5' power cords with NEMA plugs per NEMA configuration
- UL, NSF, and Energy Star Compliant

1 year Parts and Labor Warranty State Parts and Labor Warranty 1 YEAR PARTS AND LABOR

Brand Reference: AccuTemp, Model N6 DBL Connected Evolution or equivalent

State Brand/Model Bid: Cleveland Range MODEL (2) 22CGT66.1

Delivery to the following address:
Maryville Treatment Center
30227 Highway 136
Maryville, MO 64468
Phone: 660-582-6542

DELIVERY:

The desired delivery is thirty (30) calendar days after the receipt of a properly executed order. If bidder's delivery is different, the bidder should state delivery in days after receipt of order: 30 calendar days ARO.

EMPLOYEE BIDDING/CONFLICT OF INTEREST:

Bidders who are elected or appointed officials or employees of the State of Missouri or any political subdivision thereof, serving in an executive or administrative capacity, must comply with sections 105.450 to 105.458, RSMo, regarding conflict of interest. If the bidder or any owner of the bidder's organization is currently an elected or appointed official or an employee of the State of Missouri or any political subdivision thereof, please provide the following information.

Name and title of elected or appointed official or employee of the State of Missouri or any political subdivision thereof: N/A

If employee of the State of Missouri or political subdivision thereof, provide name of state agency or political subdivision where employed: _____

Percentage of ownership interest in bidder's organization held by elected or appointed official or employee of the State of Missouri or political subdivision thereof: _____%

EXHIBIT A
DOMESTIC PRODUCTS PROCUREMENT ACT (BUY AMERICAN) PREFERENCE

In accordance with sections 34.350-34.359, RSMo, the bidder is instructed to provide information regarding the point of manufacture for each of the products being bid so that the product's eligibility for the Domestic Products Procurement Act (Buy American) Preference can be determined. This information is requested for the finished product only, not for components of the finished product. The bidder may be required to provide supporting documentation indicating proof of compliance.

Qualifying for the Domestic Products Preference:
A product qualifies for the preference if one of the following circumstances exist:
- *if manufactured or produced in the U.S.; or*
- if the product is imported into the U.S. but is covered by an existing international trade treaty that affords the specific product the same status as a product manufactured or produced in the U.S.; or
- if only one line of products is manufactured or produced in the U.S.

Non-Domestic Product:
If the product is not manufactured or produced in the U.S. and does not otherwise qualify as domestic, then it will be considered non-domestic and not eligible for the preference.

THE BIDDER MUST COMPLETE THE FOLLOWING APPLICABLE TABLES TO CERTIFY WHETHER:
(Table 1) ALL products bid are manufactured or produced in the U.S. and qualify for the Domestic Products Procurement Act Preference; OR
(Table 2) ALL products bid are manufactured or produced outside the U.S. and do not otherwise qualify for the Domestic Products Procurement Act Preference; OR
(Tables 3-6) Not all products bid fall into the prior two categories so an item-by-item certification is necessary.
The bidder is responsible for certifying the information provided on the exhibit is accurate by signing where indicated at the end of the exhibit.

TABLE 1 – ALL PRODUCTS MANUFACTURED OR PRODUCED IN U.S. (eligible for preference)

Check the box to the right if ALL products bid are MANUFACTURED OR PRODUCED IN THE U.S.:	X

TABLE 2 – ALL PRODUCTS MANUFACTURED OR PRODUCED OUTSIDE U.S. AND DON'T QUALIFY FOR PREFERENCE (ineligible for preference)

Check the box to the right if ALL products bid are MANUFACTURED OR PRODUCED OUTSIDE THE U.S. and DO NOT OTHERWISE QUALIFY for the Domestic Products Procurement Act Preference:	

TABLES 3 THROUGH 6 – ITEM BY ITEM CERTIFICATION (NOT ALL PRODUCTS BID FALL INTO PRIOR TWO TABLES)
- For those line items for which a U.S.-manufactured or produced product is bid, complete **Table 3**.
- For those line items which are manufactured or produced outside the U.S. that do not qualify for the Domestic Products Procurement Act Preference, complete **Table 4**.
- For those line items which are not manufactured or produced in the U.S., *but for which there is a U.S. trade treaty, law, agreement,* or regulation in compliance with section 34.359, RSMo, complete **Table 5**.
- For those line items which are not manufactured or produced in the U.S., but for which there is only one U.S. Manufacturer of that product or line of products, complete **Table 6**.

TABLE 3 – U.S.-MANUFACTURED OR PRODUCED PRODUCTS (Eligible for Preference)
- List item numbers of products bid that are U.S.-manufactured or produced and therefore qualify for the Domestic Products Procurement Act Preference.
- List U.S. city and state where products bid are manufactured or produced.

Item #	U.S. City/State Where Manufactured/Produced	Item #	U.S. City/State Where Manufactured/Produced

TABLE 4 -- FOREIGN-MANUFACTURED OR PRODUCED PRODUCTS (Not Eligible for Preference)
- List item numbers of products bid that are foreign manufactured or produced and do not otherwise qualify for the Domestic Products Procurement Act Preference.
- List country where product bid is manufactured or produced.

Item #	Country Where Manufactured/Produced	Item #	Country Where Manufactured/Produced

(Exhibit continues on next page)

EXHIBIT A, continued: DOMESTIC PRODUCTS PROCUREMENT ACT (BUY AMERICAN) PREFERENCE

TABLE 5 -- FOREIGN-MANUFACTURED OR PRODUCED PRODUCTS BUT U.S. TRADE TREATY, LAW, AGREEMENT, OR REGULATION APPLIES (Eligible for Preference)

- List item numbers of products bid that are foreign manufactured or produced but qualify for the Domestic Products Procurement Act Preference because a U.S. Trade Treaty, Law, Agreement, or Regulation applies.
- Identify country where proposed foreign-made product is manufactured or produced.
- Identify name of applicable U.S. Trade Treaty, Law, Agreement, or Regulation that allows product to be brought into the U.S. duty/tariff-free.
- Identify website URL for the U.S. Trade Treaty, Law, Agreement, or Regulation.
- NOTE: As an imported product, if an import tariff is applied to the item, it does not qualify for the preference. In addition, "Most Favored Nation" status does not allow application of the preference unless the product enters the U.S. duty/tariff-free.

Item #	Country Where Proposed Foreign-Made Product is Manufactured/Produced	Name of Applicable U.S. Trade Treaty, Law, Agreement, or Regulation	Official Website URL for the U.S. Treaty, Law, Agreement, or Regulation

TABLE 6 -- FOREIGN-MANUFACTURED OR PRODUCED PRODUCTS BUT ONLY ONE US MANUFACTURER PRODUCES PRODUCT OR LINE OF PARTICULAR GOOD (Eligible for Preference)

- List item numbers of products bid that are foreign manufactured or produced but qualify for the Domestic Products Procurement Act Preference because only one US Manufacturer produces the product or line of a particular good.
- Identify country where proposed foreign-made product is manufactured or produced.
- Identify sole US manufacturer name.
- Identify name of sole US manufactured product/line of particular good.

Item #	Country Where Proposed Foreign-Made Product is Manufactured/Produced	Sole US Manufacturer Name	Name of Sole US Manufactured Product or Line of Particular Good

The bidder is responsible for certifying the information provided on this exhibit is accurate by signing below:

I hereby certify that the information provided herein is true and correct, and complies with all provisions of sections 34.350 to 34.359, RSMo. I understand that any misrepresentation herein constitutes the commission of a class A misdemeanor.

SIGNATURE (If submitting bid electronically, scanned or typed signature is acceptable)

Janie Gudmel - Arguello

COMPANY NAME Pueblo Hotel Supply, Inc

DBA: Grady's Foodservice Equipment & Supplies

EXHIBIT B

PARTICIPATION COMMITMENT

N/A

Organization for the Blind/Sheltered Workshop Participation Commitment – If the bidder is committing to participation by or if the bidder is a qualified organization for the blind/sheltered workshop, the bidder must provide the required information in the table below for the organization proposed and must submit the completed exhibit with the bidder's bid.

Organization for the Blind/Sheltered Workshop Commitment Table By completing this table, the bidder commits to the use of the organization at the greater of $5,000 or 2% of the actual total dollar value of contract.	
(The services performed or the products provided by the listed Organization for the Blind/Sheltered Workshop must provide a commercially useful function related to the delivery of the contractually-required service/product in a manner that will constitute an added value to the contract and shall be performed/provided exclusive to the performance of the contract.)	
Name of Organization for the Blind or Sheltered Workshop Proposed	**Description of Products/Services to be Provided by Listed Organization for the Blind/Sheltered Workshop** *The bidder should also include the paragraph number(s) from the IFB which requires the service the organization for the blind/sheltered workshop is proposed to perform.*
1.	Product/Service(s) proposed:
	IFB Paragraph References:
2.	Product/Service(s) proposed:
	IFB Paragraph References:

EXHIBIT C

DOCUMENTATION OF INTENT TO PARTICIPATE

If the bidder is proposing to include the participation of an Organization for the Blind/Sheltered Workshop in the provision of the products/services required in the IFB, the bidder must either provide a recently dated letter of intent, signed and dated no earlier than the IFB issuance date, from each organization documenting the following information, or complete and provide this Exhibit with the bidder's bid.

~ Copy This Form For Each Organization Proposed ~

Bidder Name: _____

This Section To Be Completed by Participating Organization:

By completing and signing this form, the undersigned hereby confirms the intent of the named participating organization to provide the products/services identified herein for the bidder identified above.

Indicate appropriate business classification(s):

_____ Organization for the Blind _____ Sheltered Workshop

Name of Organization: _____

(Name of Organization for the Blind or Sheltered Workshop)

Contact Name: _____ Email: _____

Address: _____ Phone #: _____

City: _____ Fax #: _____

State/Zip: _____ Certification # _____

(or attach copy of certification)

Certification Expiration Date: _____

Describe the products/services you *(as the participating organization)* have agreed to provide:

_____

_____

_____

_____

Authorized Signature:

_____ _____

Authorized Signature of Participating Organization (Organization for the Blind or Sheltered Workshop) — *Date (Dated no earlier than the IFB issuance date)*

EXHIBIT D
MISSOURI SERVICE-DISABLED VETERAN BUSINESS ENTERPRISE PREFERENCE

Pursuant to section 34.074, RSMo, and 1 CSR 40-1.050, the Division of Purchasing and Materials Management (DPMM) has a goal of awarding three (3) percent of all contracts for the performance of any job or service to qualified service-disabled veteran business enterprises (SDVEs).

STANDARDS:

The following standards shall be used by the DPMM in determining whether an individual, business, or organization qualifies as an SDVE:

- Doing business as a Missouri firm, corporation, or individual or maintaining a Missouri office or place of business, not including an office of a registered agent;
- Having not less than fifty-one percent (51%) of the business owned by one (1) or more service-disabled veterans (SDVs) or, in the case of any publicly-owned business, not less than fifty-one percent (51%) of the stock of which is owned by one (1) or more SDVs. (An SDV is defined as any individual who is disabled as certified by the appropriate federal agency responsible for the administration of veterans' affairs.);
- Having the management and daily business operations controlled by one (1) or more SDVs;
- Having a copy of the SDV's award letter from the Department of Veterans Affairs or a copy of the SDV's discharge paper (DD Form 214, Certificate of Release or Discharge from Active Duty) and a copy of the SDV's documentation certifying disability by the appropriate federal agency responsible for the administration of veterans' affairs; and
- Possessing the power to make day-to-day as well as major decisions on matters of management, policy, and operation.

If a bidder meets the standards of a qualified SDVE as stated above and unless previously submitted within the past five (5) years to the DPMM, the bidder **must** provide the following SDV documents to receive the Missouri SDVE three (3) bonus point preference:

- A copy of the SDV's award letter from the Department of Veterans Affairs or a copy of the SDV's discharge paper (DD Form 214, Certificate of Release or Discharge from Active Duty),
- A copy of the SDV's documentation certifying disability by the appropriate federal agency responsible for the administration of veterans' affairs, and
- A completed copy of this exhibit.

(NOTE: The SDV's award letter, the SDV's discharge paper, and the SDV's documentation certifying disability shall be considered confidential pursuant to subsection 14 of section 610.021, RSMo.)

EXHIBIT D (continued)
MISSOURI SERVICE-DISABLED VETERAN BUSINESS ENTERPRISE PREFERENCE

By signing below, I certify that I meet the definitions of a service-disabled veteran and a service-disabled veteran business enterprise as defined in section 34.074, RSMo. I further certify that I meet the standards of a qualifying SDVE as listed herein pursuant to 1 CSR 40-1.050.

Service-Disabled Veteran's Name (Please Print)	Service-Disabled Veteran Business Enterprise Name
Service-Disabled Veteran's Signature	Missouri Address of Service-Disabled Veteran Business Enterprise
Phone Number	Website Address
Date	E-Mail Address

The SDVE bidder should check the appropriate statement below and, if applicable, provide the requested information.

☐ No, I have not previously submitted the SDV documents specified herein to the DPMM and therefore have enclosed the SDV documents.

☐ Yes, I previously submitted the SDV documents specified herein within the past five (5) years to the DPMM.

Date SDV Documents were Submitted: _____

Previous **Bid/Contract Number** for Which the SDV Documents were Submitted: _____
(if applicable and known)

(NOTE: If the SDVE and SDV are listed on the DPMM SDVE database located at http://content.oa.mo.gov/sites/default/files/sdvelisting.pdf , then the SDV documents have been submitted to the DPMM within the past five [5] years. However, if it has been determined that an SDVE at any time no longer meets the requirements stated above, the DPMM will remove the SDVE and associated SDV from the database.)

FOR STATE USE ONLY

SDV's Documents - Verification Completed By:

Buyer	Date

STATE OF MISSOURI
DIVISION OF PURCHASING AND MATERIALS MANAGEMENT

TERMS AND CONDITIONS -- INVITATION FOR BID

1. TERMINOLOGY/DEFINITIONS

Whenever the following words and expressions appear in an Invitation for Bid (IFB) document or any amendment thereto, the definition or meaning described below shall apply.

a. **Agency and/or State Agency** means the statutory unit of state government in the State of Missouri for which the equipment, supplies, and/or services are being purchased by the **Division of Purchasing and Materials Management (DPMM)**. The agency is also responsible for payment.
b. **Amendment** means a written, official modification to an IFB or to a contract.
c. **Attachment** applies to all forms which are included with an IFB to incorporate any informational data or requirements related to the performance requirements and/or specifications.
d. **Bid Opening Date and Time** and similar expressions mean the exact deadline required by the IFB for the receipt of sealed bids.
e. **Bidder** means the person or organization that responds to an IFB by submitting a bid with prices to provide the equipment, supplies, and/or services as required in the IFB document.
f. **Buyer** means the procurement staff member of the DPMM. The **Contact Person** as referenced herein is usually the Buyer.
g. **Contract** means a legal and binding agreement between two or more competent parties, for a consideration for the procurement of equipment, supplies, and/or services.
h. **Contractor** means a person or organization who is a successful bidder as a result of an IFB and who enters into a contract.
i. **Exhibit** applies to forms which are included with an IFB for the bidder to complete and submit with the sealed bid prior to the specified opening date and time.
j. **Invitation for Bid (IFB)** means the solicitation document issued by the DPMM to potential bidders for the purchase of equipment, supplies, and/or services as described in the document. The definition includes these Terms and Conditions as well as all Pricing Pages, Exhibits, Attachments, and Amendments thereto.
k. **May** means that a certain feature, component, or action is permissible, but not required.
l. **Must** means that a certain feature, component, or action is a mandatory condition. Failure to provide or comply will result in a bid being considered non-responsive.
m. **Pricing Page(s)** applies to the form(s) on which the bidder must state the price(s) applicable for the equipment, supplies, and/or services required in the IFB. The pricing pages must be completed and submitted by the bidder with the sealed bid prior to the specified bid opening date and time.
n. **RSMo (Revised Statutes of Missouri)** refers to the body of laws enacted by the Legislature which govern the operations of all agencies of the State of Missouri. Chapter 34 of the statutes is the primary chapter governing the operations of DPMM.
o. **Shall** has the same meaning as the word must.
p. **Should** means that a certain feature, component and/or action is desirable but not mandatory.

2. APPLICABLE LAWS AND REGULATIONS

a. The contract shall be construed according to the laws of the State of Missouri. The contractor shall comply with all local, state, and federal laws and regulations related to the performance of the contract to the extent that the same may be applicable.
b. To the extent that a provision of the contract is contrary to the Constitution or laws of the State of Missouri or of the United States, the provisions shall be void and unenforceable. However, the balance of the contract shall remain in force between the parties unless terminated by consent of both the contractor and the DPMM.
c. The contractor must be registered and maintain good standing with the Secretary of State of the State of Missouri and other regulatory agencies, as may be required by law or regulations.
d. The contractor must timely file and pay all Missouri sales, withholding, corporate and any other required Missouri tax returns and taxes, including interest and additions to tax.
e. The exclusive venue for any legal proceeding relating to or arising out of the IFB or resulting contract shall be in the Circuit Court of Cole County, Missouri.
f. The contractor shall only employ personnel authorized to work in the United States in accordance with applicable federal and state laws and Executive Order 07-13 for work performed in the United States.

3. OPEN COMPETITION/INVITATION FOR BID DOCUMENT

a. It shall be the bidder's responsibility to ask questions, request changes or clarification, or otherwise advise the DPMM if any language, specifications or requirements of an IFB appear to be ambiguous, contradictory, and/or arbitrary, or appear to inadvertently restrict or limit the requirements stated in the IFB to a single source. Any and all communication from bidders regarding specifications, requirements, competitive bid process, etc., must be directed to the buyer from the DPMM, unless the IFB specifically refers the bidder to another contact. Such e-mail, fax, or phone communication should be received at least ten calendar days prior to the official bid opening date.
b. Every attempt shall be made to ensure that the bidder receives an adequate and prompt response. However, in order to maintain a fair and equitable bid process, all bidders will be advised, via the issuance of an amendment to the IFB, of any relevant or pertinent information related to the procurement. Therefore, bidders are advised that unless specified elsewhere in the IFB, any questions received less than ten calendar days prior to the IFB opening date may not be answered.
c. Bidders are cautioned that the only official position of the State of Missouri is that which is issued by the DPMM in the IFB or an amendment thereto. No other means of communication, whether oral or written, shall be construed as a formal or official response or statement.
d. The DPMM monitors all procurement activities to detect any possibility of deliberate restraint of competition, collusion among bidders, price-fixing by bidders, or any other anticompetitive conduct by bidders which appears to violate state and federal antitrust laws. Any suspected violation shall be referred to the Missouri Attorney General's Office for appropriate action.
e. The IFB is available for viewing and downloading on the state's On-Line Bidding/Vendor Registration System website. Registered bidders are electronically notified of the bid opportunity based on the information maintained in the State of Missouri's vendor database. If a registered bidder's e-mail address is incorrect, the bidder must update the e-mail address themselves on the state's On-Line Bidding/Vendor Registration System website.
f. The DPMM reserves the right to officially amend or cancel an IFB after issuance. It shall be the sole responsibility of the bidder to monitor the State of Missouri On-Line Bidding/Vendor Registration System website at: https://www.moolb.mo.gov to obtain a copy of the amendment(s). Registered bidders who received e-mail notification of the bid opportunity when the IFB was established and registered bidders who have responded to the IFB on-line prior to an amendment being issued will receive e-mail notification of the amendment(s). Registered bidders who received e-mail notification of the bid opportunity when the IFB was established and registered bidders who have responded to the bid on-line prior to a cancellation being issued will receive e-mail notification of a cancellation issued prior to the exact closing time and date specified in the IFB.

4. PREPARATION OF BIDS

a. Bidders must examine the entire IFB carefully. Failure to do so shall be at bidder's risk.
b. Unless otherwise specifically stated in the IFB, all specifications and requirements constitute minimum requirements. All bids must meet or exceed the stated specifications and requirements.
c. Unless otherwise specifically stated in the IFB, any manufacturer names, trade names, brand names, information and/or catalog numbers listed in a specification and/or requirement are for informational purposes only and are not intended to limit competition. The bidder may offer any brand which meets or exceeds the specification for any item, but must state the manufacturer's name and model number for any such brands in the bid. In addition, the bidder shall explain, in detail, (1) the reasons why the proposed equivalent meets or exceeds the specifications and/or requirements and (2) why the proposed equivalent should not be considered an exception thereto. Bids which do not comply with the requirements and specifications are subject to rejection without clarification.
d. Bids lacking any indication of intent to bid an alternate brand or to take an exception shall be received and considered in complete compliance with the specifications and requirements as listed in the IFB.
e. *In the event that the bidder is an agency of state government or other such political subdivision which is prohibited by law or court decision from complying* with certain provisions of an IFB, such a bidder may submit a bid which contains a list of statutory limitations and identification of those prohibitive clauses. The bidder should include a complete list of statutory references and citations for each provision of the IFB, which is affected by this paragraph. The statutory limitations and prohibitive clauses may (1) be requested to be clarified in writing by DPMM or (2) be accepted without further clarification if the statutory limitations and prohibitive clauses are deemed acceptable by DPMM. If DPMM determines clarification of the statutory limitations and prohibitive clauses is necessary, the clarification will be conducted in order to agree to language that reflects the intent and compliance of such law and/or court order and the IFB.
f. All equipment and supplies offered in a bid must be new, of current production, and available for marketing by the manufacturer unless the IFB clearly specifies that used, reconditioned, or remanufactured equipment and supplies may be offered.
g. Prices shall include all packing, handling and shipping charges FOB destination, freight prepaid and allowed unless otherwise specified in the IFB.
h. Bids, including all pricing therein, shall remain valid for 90 days from bid opening unless otherwise indicated. If the bid is accepted, the entire bid, including all prices, shall be firm for the specified contract period.
i. Any foreign bidder not having an Employer Identification Number assigned by the United States Internal Revenue Service (IRS) must submit a completed IRS Form W-8 prior to or with the submission of their bid in order to be considered for award.

5. SUBMISSION OF BIDS

a. Registered bidders may submit bids electronically as permitted by the IFB through the State of Missouri's On-Line Bidding/Vendor Registration System website or hard copy delivered to the DPMM office. Bidders that have not registered on the On-Line Bidding/Vendor Registration System website may submit bids hard copy delivered to the DPMM office. Delivered bids must be sealed in an envelope or container, and received in the DPMM office located at 301 West High St, Rm 630 in Jefferson City, MO no later than the exact opening time and date specified in the IFB. All bids must (1) be submitted by a duly *authorized representative of the bidder's organization, (2) contain all information required by the IFB, and (3) be priced as required. Hard copy bids may be* mailed to the DPMM post office box address. However, it shall be the responsibility of the bidder to ensure their bid is in the DPMM office (address listed above) no later than the exact opening time and date specified in the IFB.
b. The sealed envelope or container containing a bid should be clearly marked on the outside with (1) the official IFB number and (2) the official opening date and time. Different bids should not be placed in the same envelope, although copies of the same bid may be placed in the same envelope.
c. A bid submitted electronically by a registered bidder may be modified on-line prior to the official opening date and time. A bid which has been delivered to the DPMM office may be modified by signed, written notice which has been received by the DPMM prior to the official opening date and time specified. A bid may also be modified in person by the bidder or its authorized representative, provided proper identification is presented before the official opening date and time. Telephone or telegraphic requests to modify a bid shall not be honored.
d. A bid submitted electronically by a registered bidder may be canceled on-line prior to the official opening date and time. A bid which has been delivered to the DPMM office may only be withdrawn by a signed, written document on company letterhead transmitted via mail, e-mail, or facsimile which has been received by the DPMM prior to the official opening date and time specified. A bid may also be withdrawn in person by the bidder or its authorized representative, provided proper identification is presented before the official opening date and time. Telephone or telegraphic requests to withdraw a bid shall not be honored.
e. A bid may also be withdrawn after the bid opening through submission of a written request by an authorized representative of the bidder. Justification of withdrawal decision may include a significant error or exposure of bid information that may cause irreparable harm to the bidder.
f. When submitting a bid electronically, the registered bidder indicates acceptance of all IFB terms and conditions by clicking on the "Submit" button on the Electronic Bid Response Entry form. Bidders delivering a hard copy bid to DPMM must sign and return the IFB cover page or, if applicable, the cover page of the last amendment thereto in order to constitute acceptance by the bidder of all IFB terms and conditions. Failure to do so may result in rejection of the bid unless the bidder's full compliance with those documents is indicated elsewhere within the bidder's response.
g. Faxed bids shall not be accepted. However, faxed and e-mail no-bid notifications shall be accepted.

6. BID OPENING

a. Bid openings are public on the opening date and at the opening time specified on the IFB document. Names, locations, and prices of respondents shall be read at the bid opening. All vendors may view the names and prices of the respondents on the state's On-Line Bidding/Vendor Registration System website after the official opening date and time. The DPMM will not provide prices or other bid information via the telephone.
b. Bids which are not received in the DPMM office prior to the official opening date and time shall be considered late, regardless of the degree of lateness, and normally will not be opened. Late bids may only be opened under extraordinary circumstances in accordance with 1 CSR 40-1.050.

7. PREFERENCES

a. In the evaluation of bids, preferences shall be applied in accordance with chapter 34, RSMo, other applicable Missouri statutes, and applicable Executive Orders. Contractors should apply the same preferences in selecting subcontractors.
b. By virtue of statutory authority, a preference will be given to materials, products, supplies, provisions and all other articles produced, manufactured, mined, processed or grown within the State of Missouri and to all firms, corporations or individuals doing business as Missouri firms, corporations or individuals. Such preference shall be given when quality is equal or better and delivered price is the same or less.
c. In accordance with Executive Order 05-30, contractors are encouraged to utilize certified minority and women-owned businesses in selecting subcontractors.

8. EVALUATION/AWARD

a. Any clerical error, apparent on its face, *may be corrected by the buyer before contract award. Upon discovering an apparent clerical error, the buyer shall* contact the bidder and request clarification of the intended bid. The correction shall be incorporated in the notice of award. Examples of apparent clerical errors are: 1) misplacement of a decimal point; and 2) obvious mistake in designation of unit.

b. Any pricing information submitted by a bidder shall be subject to evaluation if deemed by the DPMM to be in the best interest of the State of Missouri.
c. The bidder is encouraged to propose price discounts for prompt payment or propose other price discounts that would benefit the State of Missouri. However, unless otherwise specified in the IFB, pricing shall be evaluated at the maximum potential financial liability to the State of Missouri.
d. Awards shall be made to the bidder whose bid (1) complies with all mandatory specifications and requirements of the IFB and (2) is the lowest and best bid, considering price, responsibility of the bidder, and all other evaluation criteria specified in the IFB and (3) complies with chapter 34, RSMo, other applicable Missouri statutes, and all applicable Executive Orders.
e. In the event all bidders fail to meet the same mandatory requirement in an IFB, DPMM reserves the right, at its sole discretion, to waive that requirement for all bidders and to proceed with the evaluation. In addition, the DPMM reserves the right to waive any minor irregularity or technicality found in any individual bid.
f. The DPMM reserves the right to reject any and all bids. When all bids are non-responsive or otherwise unacceptable and circumstances do not permit a rebid, DPMM may negotiate for the required supplies.
g. When evaluating a bid, the State of Missouri reserves the right to consider relevant information and fact, whether gained from a bid, from a bidder, from bidder's references, or from any other source.
h. Any information submitted with the bid, regardless of the format or placement of such information, may be considered in making decisions related to the responsiveness and merit of a bid and the award of a contract.
i. Any award of a contract shall be made by notification from the DPMM to the successful bidder. The DPMM reserves the right to make awards by item, group of items, or an all or none basis. The grouping of items awarded shall be determined by DPMM based upon factors such as item similarity, location, administrative efficiency, or other considerations in the best interest of the State of Missouri.
j. All bids and associated documentation which were submitted on or before the official opening date and time will be considered open records pursuant to section 610.021, RSMo, following the official opening of bids.
k. The DPMM posts all bid results on the On-line Bidding/Vendor Registration System website for all vendors to view for a reasonable period after bid award. The DPMM maintains images of all bid file material for review. Bidders who include an e-mail address with their bid will be notified of the award results via e-mail.
l. The DPMM reserves the right to request clarification of any portion of the bidder's response in order to verify the intent of the bidder. The bidder is cautioned, however, that its response may be subject to acceptance or rejection without further clarification.
m. Any bid award protest must be received within ten (10) business days after the date of award in accordance with the requirements of 1 CSR 40-1.050 (9).
n. The final determination of contract award(s) shall be made by DPMM.

9. CONTRACT/PURCHASE ORDER

a. By submitting a bid, the bidder agrees to furnish any and all equipment, supplies and/or services specified in the IFB, at the prices quoted, pursuant to all requirements and specifications contained therein.
b. A binding contract shall consist of: (1) the IFB and any amendments thereto, (2) the contractor's response (bid) to the IFB, (3) clarification of the bid, if any, and (4) DPMM's acceptance of the response (bid) by "notice of award" or by "purchase order." All Exhibits and Attachments included in the IFB shall be incorporated into the contract by reference.
c. A notice of award issued by the State of Missouri does not constitute an authorization for shipment of equipment or supplies or a directive to proceed with services. Before providing equipment, supplies and/or services for the State of Missouri, the contractor must receive a properly authorized purchase order or other form of authorization given to the contractor at the discretion of the state agency.
d. The contract expresses the complete agreement of the parties and performance shall be governed solely by the specifications and requirements contained therein. Any change to the contract, whether by modification and/or supplementation, must be accomplished by a formal contract amendment signed and approved by and between the duly authorized representative of the contractor and the DPMM or by a modified purchase order prior to the effective date of such modification. The contractor expressly and explicitly understands and agrees that no other method and/or no other document, including correspondence, acts, and oral communications by or from any person, shall be used or construed as an amendment or modification to the contract.

10. INVOICING AND PAYMENT

a. The State of Missouri does not pay state or federal taxes unless otherwise required under law or regulation.
b. The statewide financial management system has been designed to capture certain receipt and payment information. For each purchase order received, an invoice must be submitted that references the purchase order number and must be itemized in accordance with items listed on the purchase order. Failure to comply with this requirement may delay processing of invoices for payment.
c. The contractor shall not transfer any interest in the contract, whether by assignment or otherwise, without the prior written consent of the DPMM.
d. Payment for all equipment, supplies, and/or services required herein shall be made in arrears unless otherwise indicated in the IFB.
e. The State of Missouri assumes no obligation for equipment, supplies, and/or services shipped or provided in excess of the quantity ordered. Any unauthorized quantity is subject to the state's rejection and shall be returned at the contractor's expense.
f. All invoices for equipment, supplies, and/or services purchased by the State of Missouri shall be subject to late payment charges as provided in section 34.055, RSMo.
g. The State of Missouri reserves the right to purchase goods and services using the state purchasing card.

11. DELIVERY

Time is of the essence. Deliveries of equipment, supplies, and/or services must be made no later than the time stated in the contract or within a reasonable period of time, if a specific time is not stated.

12. INSPECTION AND ACCEPTANCE

a. No equipment, supplies, and/or services received by an agency of the state pursuant to a contract shall be deemed accepted until the agency has had reasonable opportunity to inspect said equipment, supplies, and/or services.
b. All equipment, supplies, and/or services which do not comply with the specifications and/or requirements or which are otherwise unacceptable or defective may be rejected. In addition, all equipment, supplies, and/or services which are discovered to be defective or which do not conform to any warranty of the contractor upon inspection (or at any later time if the defects contained were not reasonably ascertainable upon the initial inspection) may be rejected.
c. The State of Missouri reserves the right to return any such rejected shipment at the contractor's expense for full credit or replacement and to specify a reasonable date by which replacements must be received.
d. The State of Missouri's right to reject any unacceptable equipment, supplies, and/or services shall not exclude any other legal, equitable or contractual remedies the state may have.

13. WARRANTY

a. The contractor expressly warrants that all equipment, supplies, and/or services provided shall: (1) conform to each and every specification, drawing, sample or other description which was furnished to or adopted by the DPMM, (2) be fit and sufficient for the purpose expressed in the IFB, (3) be merchantable, (4) be of good materials and workmanship, and (5) be free from defect.
b. Such warranty shall survive delivery and shall not be deemed waived either by reason of the state's acceptance of or payment for said equipment, supplies, and/or services.

14. CONFLICT OF INTEREST

a. Elected or appointed officials or employees of the State of Missouri or any political subdivision thereof, serving in an executive or administrative capacity, must comply with sections 105.452 and 105.454, RSMo, regarding conflict of interest.
b. The contractor hereby covenants that at the time of the submission of the bid the contractor has no other contractual relationships which would create any actual or perceived conflict of interest. The contractor further agrees that during the term of the contract neither the contractor nor any of its employees shall acquire any other contractual relationships which create such a conflict.

15. REMEDIES AND RIGHTS

a. No provision in the contract shall be construed, expressly or implied, as a waiver by the State of Missouri of any existing or future right and/or remedy available by law in the event of any claim by the State of Missouri of the contractor's default or breach of contract.
b. The contractor agrees and understands that the contract shall constitute an assignment by the contractor to the State of Missouri of all rights, title and interest in and to all causes of action that the contractor may have under the antitrust laws of the United States or the State of Missouri for which causes of action have accrued or will accrue as the result of or in relation to the particular equipment, supplies, and/or services purchased or procured by the contractor in the fulfillment of the contract with the State of Missouri.

16. CANCELLATION OF CONTRACT

a. *In the event of material breach of the contractual obligations by the contractor, the DPMM may cancel the contract. At its sole discretion, the DPMM may give* the contractor an opportunity to cure the breach or to explain how the breach will be cured. The actual cure must be completed within no more than 10 working days from notification, or at a minimum the contractor must provide DPMM within 10 working days from notification a written plan detailing how the contractor intends to cure the breach.
b. If the contractor fails to cure the breach or if circumstances demand immediate action, the DPMM will issue a notice of cancellation terminating the contract immediately. If it is determined the DPMM improperly cancelled the contract, such cancellation shall be deemed a termination for convenience in accordance with the contract.
c. If the DPMM cancels the contract for breach, the DPMM reserves the right to obtain the equipment, supplies, and/or services to be provided pursuant to the contract from other sources and upon such terms and in such manner as the DPMM deems appropriate and charge the contractor for any additional costs incurred thereby.
d. The contractor understands and agrees that funds required to fund the contract must be appropriated by the General Assembly of the State of Missouri for each fiscal year included within the contract period. The contract shall not be binding upon the state for any period in which funds have not been appropriated, and the state shall not be liable for any costs associated with termination caused by lack of appropriations.

17. COMMUNICATIONS AND NOTICES

Any notice to the bidder/contractor shall be deemed sufficient when deposited in the United States mail postage prepaid, transmitted by facsimile, transmitted by e-mail or hand-carried and presented to an authorized employee of the bidder/contractor.

18. BANKRUPTCY OR INSOLVENCY

a. Upon filing for any bankruptcy or insolvency proceeding by or against the contractor, whether voluntary or involuntary, or upon the appointment of a receiver, trustee, or assignee for the benefit of creditors, the contractor must notify the DPMM immediately.
b. Upon learning of any such actions, the DPMM reserves the right, at its sole discretion, to either cancel the contract or affirm the contract and hold the contractor responsible for damages.

19. INVENTIONS, PATENTS AND COPYRIGHTS

The contractor shall defend, protect, and hold harmless the State of Missouri, its officers, agents, and employees against all suits of law or in equity resulting from patent and copyright infringement concerning the contractor's performance or products produced under the terms of the contract.

20. NON-DISCRIMINATION AND AFFIRMATIVE ACTION

In connection with the furnishing of equipment, supplies, and/or services under the contract, the contractor and all subcontractors shall agree not to discriminate against recipients of services or employees or applicants for employment on the basis of race, color, religion, national origin, sex, age, disability, or veteran status unless otherwise provided by law. If the contractor or subcontractor employs at least 50 persons, they shall have and maintain an affirmative action program which shall include:

a. A written policy statement committing the organization to affirmative action and assigning management responsibilities and procedures for evaluation and dissemination;
b. The identification of a person designated to handle affirmative action;
c. The establishment of non-discriminatory selection standards, objective measures to analyze recruitment, an upward mobility system, a wage and salary structure, and standards applicable to layoff, recall, discharge, demotion, and discipline;
d. The exclusion of discrimination from all collective bargaining agreements; and
e. Performance of an internal audit of the reporting system to monitor execution and to provide for future planning.

If discrimination by a contractor is found to exist, the DPMM shall take appropriate enforcement action which may include, but not necessarily be limited to, cancellation of the contract, suspension, or debarment by the DPMM until corrective action by the contractor is made and ensured, and referral to the Attorney General's Office, whichever enforcement action may be deemed most appropriate.

21. AMERICANS WITH DISABILITIES ACT

In connection with the furnishing of equipment, supplies, and/or services under the contract, the contractor and all subcontractors shall comply with all applicable requirements and provisions of the Americans with Disabilities Act (ADA).

22. FILING AND PAYMENT OF TAXES

The commissioner of administration and other agencies to which the state purchasing law applies shall not contract for goods or services with a vendor if the vendor or an affiliate of the vendor makes sales at retail of tangible personal property or for the purpose of storage, use, or consumption in this state but fails to collect and properly pay the tax as provided in chapter 144, RSMo. For the purposes of this section, "affiliate of the vendor" shall mean any person or entity that is controlled by or is under common control with the vendor, whether through stock ownership or otherwise. Therefore bidder's failure to maintain compliance with chapter 144, RSMo, may eliminate their bid from consideration for award.

23. TITLES

Titles of paragraphs used herein are for the purpose of facilitating reference only and shall not be construed to infer a contractual construction of language.

Revised 12-27-12

END OF DOCUMENT

Quote

Date
2/17/2014

Project:
WORKING Missouri DOC

From:
Pueblo Hotel Supply dba
Grady's
Jamie Arguello
430 West 4th Street
PO Box 1587 (81002)
Pueblo CO 81003-3213

Project Code: 8872____

Item	Qty	Description	Sell	Sell Total
1	1 ea	**COFFEE URN** Grindmaster-Cecilware Packed: ea AMW Coffee Urn, Tamper Resistant, twin automatic dual wall insulated urns, pump type brewing system, 10 gallon capacity per liner, electric heat, side mounted control panel (Grindmaster)	$7,349.35	$7,349.35
	1 ea	1 year parts & labor warranty, standard		
	1 ea	3 years parts only warranty, standard		
	1 ea	Export voltages available, contact factory for information 480v/3ph		
	1 ea	Flanged feet, for urns (Grindmaster)		
2	1 ea	**COFFEE URN** Grindmaster-Cecilware Packed: ea Automatic Coffee Urn, electric, twin 6 gallon capacity each, brews in 1 or 2 lb. batches, fresh water brewing system, adjustable by-pass, automatic push button agitator, cycle stop switch, side mounted control panel, stainless steel construction, 1/4" water line required, (Cecilware)	$2,783.17	$2,783.17
	1 ea	1 year parts & labor warranty, standard		
	1 ea	3 years parts only warranty, standard		
	1 ea	120/208v/60/1-ph, 7.5 kw, 38.0 amps		
3	1 ea	**ELECTRIC FOOD CUTTER** Univex Packed: ea Bowl Cutter, 14" diameter s/s bowl 24 rpm, twin s/s knives 3,500 cuts/min, pull/push on-off, bowl cover interlock, polished & anodized aluminum construction, 1/2 HP motor, 5' cord & plug, ETL, NSF	$3,227.41	$3,227.41
	1 ea	One-year, on-site parts & labor warranty, see model "WARRANTY SHEET" for details		
	1 ea	115v/60/1ph		

Initial: _____

Item	Qty	Description	Sell	Sell Total
04	1 ea	**ELECTRIC FOOD CUTTER** Hobart Packed: ea Food Cutter, Correctional, with #12 attachment hub, 18" diameter stainless steel bowl 20 rpm, double stainless steel knives 1725 rpm, bowl cover with safety interlock, push/pull on/off switch, one-piece burnished aluminum housing, 3" legs, 1 hp, 115/60/1	$8,293.94	$8,293.94
	1 ea	Standard warranty - 1-Year parts, labor & travel time during normal working hours within the USA		
5	1 ea	**MIXER, PLANETARY** Varimixer Packed: ea Food Mixer, 100-qt. capacity bowl, variable speed, 4 HP, overload protection, powder paint finish, 15 min. timer, power bowl lift, bowl truck with handle, bowl screen, includes: stainless steel bowl, dough hook, wire whip, alloy flat beater, UL, NSF	$17,922.11	$17,922.11
	1 ea	One year parts and labor warranty		
	1 ea	208-220v/60/3, 13 amps		
	1 ea	Prison Package		
	1 ea	Prison Package with Key Switch	$179.10	<Optional>
	1 ea			
			ITEM TOTAL:	**$17,922.11**
6	1 ea	**FOOD PROCESSOR** Hobart Packed: ea Food Processor - Unit Only, angled continuous feed design, full-size hopper, 26 lb per/min production cap., 430 rpm, stainless steel cutting surfaces, planetary gear transmission, triple safety interlocks, aluminum housing, rubber feet, 120/60/1, 1 HP	$5,326.06	$5,326.06
	1 ea	Standard warranty - 1-Year parts, labor & travel time during normal working hours within the USA		
	1 ea	3/4" dicer plate (20.0mm)		
007	3 ea	**FOOD PROCESSOR** Hobart Packed: ea Food Processor - Correctional, Unit Only, continuous feed design, 88 lb. per/min. production cap., stainless steel cutting surfaces, gear transmission, triple safety interlocks, aluminum housing, rubber feet, (unit only) 2-speed motor, 208-240/60/3 (hopper or push feed not included)	$11,740.11	$35,220.34
	3 ea	Standard warranty - 1-Year parts, labor & travel time during normal working hours within the USA		
	3 ea	Bulk feed hopper & cylinder		

Item	Qty	Description	Sell	Sell Total
08	1 ea	**VEGETABLE/POTATO PEELER** Hobart Packed: ea Vegetable Peeler, Correctional, 50-60 lb. potatoes in 1-3 minute cap., no timer, V-belt drive, removable. abrasive silicon carbide disc & lexan liner, welded stainless steel construction, lockable controls, tamper resistant fasteners, 1 hp, 200-230/60/3	$6,810.11	$6,810.11
	1 ea	Standard warranty - 1-Year parts, labor & travel time during normal working hours within the USA		
9	1 ea	**MIXER, PLANETARY** Globe Packed: ea Planetary Mixer, 80 qt., floor model, 4 fixed-speed, #12 hub, electronic digital controls with 99 minute timer, includes: stainless steel bowl guard with built-in ingredient chute, 80 qt. stainless steel bowl, aluminum spiral dough hook, stainless steel whip & aluminum beater, bowl truck, safety interlocked bowl guard, power bowl lift, gear driven high torque transmission, thermal overload protection, automatic safety shut-off, cast iron body, non-slip rubber feet, 6 ft cord & plug, 3 HP, 10 amps, 208/60/3-ph, NEMA L15-20P, NSF, cETlus	$13,956.00	$13,956.00
	1 ea	2 year parts (excludes wear/expendable parts), 1 year labor warranty - CONTACT FACTORY FOR DETAILS		
	1 ea	Correctional Package, FACTORY INSTALLED (pricing applies only at time of equipment purchase)		

Item	Qty	Description	Sell	Sell Total
010	1 ea	**REACH-IN FREEZER, 2 SECTIONS** Victory Refrigeration Packed: ea V-Series Freezer, Reach-in, two-section, 46.5 cu. ft. capacity, top mount self-contained refrigeration, stainless steel exterior, aluminum interior, standard depth cabinet, digital thermometer, (4) half-height doors, (6) shelves, incandescent lighting, door locks, electronic controls, 6" casters, 1/2 hp, 115v/60/1, 12.0 amps, 10' cord, NEMA 5-20P, UL, cUL, NSF, MADE IN USA	$3,945.85	$3,945.85
	1 ea	115v/60/1-ph, 13.4 amps,		
	1 ea	Self-Contained refrigeration		
	1 ea	5-yr. compressor warranty within the USA and Canada, valued at $80.00 net included in equipment price		
	1 ea	WARRANTY UPDATED: Full 3-year parts/labor service warranty within the USA and Canada valued at $135.00 net included in equipment price, standard		
	1 ea	Door hinging: left door hinged on left, right door hinged on right standard		
	1 ea	Incandescent light		
	1 ea	Casters, set of 4, 6" high with 5" wheel, 2 with brakes, standard		
11	1 ea	**REACH-IN FREEZER, 2 SECTIONS** Delfield Packed: ea Freezer, Reach-in, two-section, 43.5 cubic feet, top mounted self-contained refrigeration 404A, digital thermometer, stainless steel front, aluminum ends, ABS interior, (3) epoxy coated wire shelves per section, solid hinged full height doors, casters, 3/4 hp, cUL, UL, NSF	$3,219.93	$3,219.93
	1 ea	115v/60/1, 12.0 amps, with cord & NEMA 5-15P, standard		
	1 ea	(3) Year parts & labor warranty, standard (USA)		
	1 ea	5 Year compressor warranty standard		
	1 ea	Left door hinged on left, right door hinged on right, standard		

Item	Qty	Description	Sell	Sell Total
012ALT	1 ea	**REACH-IN FREEZER, 3 SECTIONS** Victory Refrigeration Packed: ea UltraSpec Series 1 Freezer, Reach-in, three-section, self-contained refrigeration, 70.1 cu. ft. capacity, (6) hinged doors, (9) shelves, stainless exterior & interior, standard depth cabinet, half-height doors, 3/4 HP, V-TEMP electronic temperature control/indicator	$9,454.49	$9,454.49
	1 ea	WARRANTY UPDATED: Full 3-year parts/labor service warranty within the USA and Canada valued at $135.00 net included in equipment price, standard		
	1 ea	Self-Contained refrigeration		
	1 ea	115/208-230v/60/1-ph, 12.9 amps		
	1 ea	5-yr compressor warranty within the USA and Canada valued at $80.00 net included in equipment price		
	1 ea	Door hinging: left door hinged on left, center and right doors hinged on right standard		
	1 ea	Incandescent light		
	1 ea	Casters, set of 4, 4" high with 3" wheel		
13	3 ea	**CUSTOM** Delfield Packed: ea SPLE Spec Line roll in HTD, WITH S/S INTERIOR, DOOR ARRANGEMENT AS FOLLOWS, CONTROL SIDE SEC 1 HINGED LEFT FULLL S/S SEC 2 HINGED RIGHT FULL S/S. OPTIONS TO INCLUDE, HASP LOCK, TMPER PROOF SCREWS, SECURITY SHIELD, COVERLESS HINGE	$6,279.77	$18,839.32
	1 ea	**KETTLE COVER** Southbend Packed: ea Spring assist cover for 100 gallon kettle	$1,331.11	$1,331.11
014	1 ea	**TRAY DELIVERY CART** Carter-Hoffmann Packed: ea Correctional Transport Cart, heated, for compartment trays, mobile, insulated, bottom mount heat, (60) 10" x 14" or (30) 14" x 18" or 15" x 20" trays capacity (trays not included), slides on 3" spacing, thermometer, recessed controls, flush mounted (2) door (sample tray required) & latch, push handles, wrap-around bumper, stainless steel construction, 8" casters (2 with brakes), 120v/60/1-ph, 1600w, 13.7 amps, NEMA 5-15P, cUL, NSF, ULeph	$6,203.42	$6,203.42
	1 ea	1 Year parts and labor		

Item	Qty	Description	Sell	Sell Total
15	1 ea	**ICE DISPENSER** Servend Packed: ea Ice Dispenser, 250-lb. capacity, manual fill or top-mount, lever style dispensers, one-piece ABS base, lighted merchandiser with "Ice" graphic, drain & leg kit, cUL, UL, NSF	$2,808.60	$2,808.60
	1 ea	2 year limited parts & 1 year limited labor warranty (USA)		
	1 ea	120v/60/1-ph, 2.8 amps, standard		
	1 ea	Valves to be determined		
	1 ea	Water dispenser		
16	2 ea	**NUGGET ICE MAKER** Manitowoc Packed: ea RN-Series Ice Maker, nugget-style, air-cooled, self-contained condenser, up to 385-lb approximately/24 hours, stainless steel finish	$5,787.49	$11,574.98
	2 ea	3 year parts & 2 year labor Commercial warranty		
	2 ea	5 year parts & 2 year labor Commercial warranty on compressor		
	2 ea	(-161) 115v/60/1ph, 11.0 amps, 7' cord, NEMA 5-20 right angle plug, std.		
	2 ea	Servend Ice Dispenser, 250-lb. capacity, manual fill or top-mount, lever style dispensers, one-piece ABS base, lighted merchandiser with "Ice" graphic, drain & leg kit, cUL, UL, NSF		
	2 ea	Servend 2 year limited parts & 1 year limited labor warranty (USA)		
	2 ea	Servend 120v/60/1-ph, 2.8 amps, standard		
	2 ea	Servend Valves to be determined		
	2 ea	Servend For use with 22" wide Manitowoc Ice Machines: 5031149 Adapter kit		
	2 ea	Servend Spiral Nugget Agitator		

Item	Qty	Description	Sell	Sell Total
17	1 ea	**TILTING KETTLE, 60 GAL** Southbend Packed: ea Tilting Kettle, electric, 60-gallon capacity, two-thirds jacket, thermostatic control, stainless steel interior and exterior finish, stainless steel console with crank tilt with self-locking positive stop, stainless steel tri-leg base, 18 kw	$14,876.07	$14,876.07
	1 ea	Standard one year limited warranty		
	1 ea	440v/60/3-ph, 460v/60/3-ph or 480v/60/3-ph (specify)		
	1 ea	No. 316 liner (60, 80 & 100 gallon)		
	1 ea	2" tangent draw off valve mounted to the front toward left side of tilting kettle		
	1 ea	Permanent etched interior markings, for 60 gallon kettle (specify gallon or liter markings)		
	1 ea	Correctional screws & tack welds where applicable		
	1 ea	Stainless steel cover over control panel with locking provisions		
18	2 ea	**TILTING KETTLE, 60 GAL** Southbend Packed: ea Tilting Kettle, electric, 60-gallon capacity, two-thirds jacket, thermostatic control, stainless steel interior and exterior finish, stainless steel console with crank tilt with self-locking positive stop, stainless steel tri-leg base, 18 kw	$15,862.12	$31,724.25
	2 ea	Standard one year limited warranty		
	2 ea	440v/60/3-ph, 460v/60/3-ph or 480v/60/3-ph (specify)		
	2 ea	No. 316 liner (60, 80 & 100 gallon)		
	2 ea	3" tangent draw off valve added to tilting kettle		
	2 ea	Perforated Strainer, for 3" draw-offs		
	2 ea	Lift off cover for 60 gallon kettle		
	2 ea	Correctional screws & tack welds where applicable		
	2 ea	Stainless steel cover over control panel with locking provisions		

Item	Qty	Description	Sell	Sell Total
19	1 ea	**STATIONARY KETTLE** Cleveland Range Packed: ea Kettle, Electric, 60-gallon capacity, 2/3 steam jacket design, open tri-leg base, faucet bracket, strainer, standard with flanged feet, 50 psi rating, 2" tangent draw-off, spring-assisted cover, stainless steel construction	$12,984.82	$12,984.82
	1 ea	1-year limited warranty, standard		
	1 ea	Standard wattage		
	1 ea	(VOK2) 440/480v/60/3-ph, 19.6kW, 23.6 amp		
	1 ea	2" Tangent draw-off, standard		
	1 ea	Kettle Markings, 5 gallon increments		
	1 ea	Gallon marks		
	1 ea	316 stainless steel liner, for 60, 80 and 100 gallons, per each kettle		
	1 ea	Protective box for controls, completely covers controls, gas and electric models only (locks provided by others)		
	1 ea	Tamper proof spring hinge assembly with spanner drilled screws used to prevent removal, tamper resistant cover with welded brackets to prevent dome cover rotation & removal (price does not include cover)		
	1 ea	Tangent draw-off valve protection, stainless steel BAR WELDED TO KETTLE		
	1 ea	Cable attached to TD valve stem		
	1 ea	Tamper proof spanner drilled head screws - prevent removal of steam valve & spring hinge assembly		

Item	Qty	Description	Sell	Sell Total
20	1 ea	**STATIONARY KETTLE** Southbend Packed: ea Stationary Kettle, electric, 100-gallon capacity, two-thirds jacket, thermostatic control, 2" draw-off, counter balanced hinged cover, 316 stainless steel interior liner, stainless steel exterior, tri-leg, 24 kw	$15,565.46	$15,565.46
	1 ea	Standard one year limited warranty		
	1 ea	440v/60/3-ph, 460v/60/3-ph or 480v/60/3-ph (specify)		
	1 ea	No. 316 liner (60, 80 & 100 gallon)		
	1 ea	3" tangent draw off valve for stationary kettles, in lieu of standard 2"		
	1 ea	Perforated Strainer, for 3" draw-offs		
	1 ea	Permanent etched interior markings, for 100 gallon kettle (specify gallon or liter markings)		
	1 ea	Stainless steel perforated step cover over draw-off valve		
	1 ea	Correctional screws & tack welds where applicable		
	1 ea	Locking mechanism for lid		
	1 ea	Stainless steel cover over control panel with locking provisions		
21	2 ea	**TILTING KETTLE, 20 GAL** Southbend Packed: ea Tilting Kettle, Gas, 20-gallon capacity, two-thirds jacket, thermostatic control, electronic ignition, 316 stainless steel interior liner, stainless steel exterior, stainless steel console with crank tilt, 1-5/8" diameter stainless steel legs with flanged feet, 80,000 BTU	$15,605.99	$31,211.98
	2 ea	Standard one year limited warranty		
	2 ea	Natural Gas		
	2 ea	120v/50/60/1-ph, 6' cord and plug, standard		
	2 ea	Spring assist cover for 20 gallon kettle		
	2 ea	Permanent etched interior markings, for 20 gallon kettle (specify gallon or liter markings)		
	2 ea	Correctional screws & tack welds where applicable		
	2 ea	Stainless steel cover over control panel with locking provisions		

Item	Qty	Description	Sell	Sell Total
22	1 ea	**TILTING KETTLE** Southbend Packed: ea Tilting Kettle, Direct, 80-gallon cap., two-thirds jacket, stainless steel interior and exterior finish, stainless steel console with crank tilt with self-locking positive stop, stainless steel tri-leg base, 35 psi	$12,153.80	$12,153.80
	1 ea	Standard one year limited warranty		
	1 ea	No. 316 liner (60, 80 & 100 gallon)		
	1 ea	3" tangent draw off valve added to tilting kettle		
	1 ea	Perforated Strainer, for 3" draw-offs		
	1 ea	18" single pantry faucet		
	1 ea	Contour measuring strip 20-100 gallon		
	1 ea	Permanent etched interior markings, for 80 gallon kettle (specify gallon or liter markings)		
	1 ea	Steam control assembly, consisting of; line, strainer, steam inlet globe		
	1 ea	Correctional screws & tack welds where applicable		
	1 ea	Stainless steel cover over control panel with locking provisions		
23	2 ea	**TILTING KETTLE** Southbend Packed: ea Tilting Kettle, Direct, 80-gallon cap., two-thirds jacket, stainless steel interior and exterior finish, stainless steel console with crank tilt with self-locking positive stop, stainless steel tri-leg base, 35 psi	$11,058.99	$22,117.97
	2 ea	Standard one year limited warranty		
	2 ea	No. 316 liner (60, 80 & 100 gallon)		
	2 ea	3" tangent draw off valve added to tilting kettle		
	2 ea	Perforated Strainer, for 3" draw-offs		
	2 ea	18" double pantry faucet		
	2 ea	Permanent etched interior markings, for 80 gallon kettle (specify gallon or liter markings)		
	2 ea	Steam control assembly, consisting of; line, strainer, steam inlet globe		

Item	Qty	Description	Sell	Sell Total
24	2 ea	**CUSTOM** Delfield Packed: ea SPL SPEC LINE PASS THRU REFG, WITH S/S INTERIOR. DOOR ARRANGEMENT AS FOLLOWS, CONTROL SIDE SEC 1 HINGED LEFT FULL S/S SEC 2 HINGED RIGHT FULL S/S SERVICE SIDE SEC 2 HINGED RIGHT FULL S/S SEC 1. HINGED RIGHT FULL S/S. OPTIONS TO INCLUDE, HASP LOCK TWO DOOR, TAMPER PROOF S/S SCREWS, SECURITYSHIELD, COVERLESS HINGE, REFG SYS PWS CASTERS 2 SECTION	$8,761.65	$17,523.30
25	1 ea	**REACH-IN REFRIGERATOR, 2 SECTIONS** Delfield Packed: ea Refrigerator, Reach-in, two-section, 43.5 cubic feet, top mounted self-contained refrigeration 404A, digital thermometer, stainless steel front, aluminum ends, ABS interior, (3) epoxy coated wire shelves per section, solid hinged full height doors, casters, 1/3 hp, cUL, UL, NSF 1 ea 115v/60/1, 8.0 amps, with cord & NEMA 5-15P, standard 1 ea (3) Year parts & labor warranty, standard (USA) 1 ea 5 Year compressor warranty standard 1 ea Left door hinged on left, right door hinged on right, standard	$2,616.21	$2,616.21

Item	Qty	Description	Sell	Sell Total
026	1 ea	**ROLL-IN REFRIGERATOR, 1 SECTION** Victory Refrigeration Packed: ea UltraSpec Series 1 Refrigerator, Roll-in, one-section, self-contained refrigeration, 33.6 cu. ft. capacity, aluminum exterior & interior, stainless steel front & doors, standard depth cabinet, full-height door, 1/3 HP, V-TEMP electronic temperature control/indicator, UL, cUL, NSF	$4,237.91	$4,237.91
	1 ea	WARRANTY UPDATED: Full 3-year parts/labor service warranty within the USA and Canada valued at $135.00 net included in equipment price, standard		
	1 ea	Self-Contained refrigeration		
	1 ea	115v/60/1-ph, 9.4 amps, hardwired or includes cord and plug, shipped loose		
	1 ea	5-yr compressor warranty within the USA and Canada, valued at $80.00 net included in equipment price		
	1 ea	Door hinging: standard on right		
	1 ea	Stainless steel ramp, Roll-in, 1 per door opening needed		
	1 ea	Incandescent light		
	1 ea	Extra heavy duty hinges w/"one way" screws		
	1 ea	Stainless steel slotted panel top cover		
	1 ea	Heavy gauge chrome plated steel padlock hasp & cylinder locks		
26	1 ea	**CUSTOM** Delfield Packed: ea SPL SPEC LINE ROLL IN REFG, WITH S/S INTERIOR. DOOR ARRANGEMENT AS FOLLOWS, CONTROLS SSIDE SEC 1 HINGED RIGHT FULL S/S. OPTIONS TO INCLUDE, HASP LOCK, TAMPER PROOF SCREWS, SECURITY SHIELD, COVERLESS HINGE	$4,792.78	$4,792.78
27	3 ea	**CUSTOM** Delfield Packed: ea No drawings were provided with the requiest for quote. All items are quoted as free standing units. If equipment is in a line up that requires otehr modifications, please contact. SKU SH-6-NU Six Well Hot Food Counter with enclosed base 36 High Please see attached enclosures for details.	$5,354.88	$16,064.64

Item	Qty	Description	Sell	Sell Total
28	3 ea	**CUSTOM** Delfield Packed: ea SCSC-96-B 96" Refrigerate Cold Pan Serving Counter 36 Inched High Please see attached foe details	$6,843.87	$20,531.62
29	1 ea	**CONVECTION STEAMER** Southbend Packed: ea Convection Steamer, Electric, (5) pan cap. top & (5) pan cap. bottom, manual controls each with three way power switch (ON/OFF/Delime), stainless steel interior and exterior finish, stacked units on stainless steel storage cabinet base, split water connections, (2) 15kw, NSF	$11,113.32	$11,113.32
	1 ea	Standard one year limited warranty		
	1 ea	208v/50/60/3-ph, 83.3 amps, 30.0 kW, direct, standard		
	1 ea	Scale Master Filter System 2, scale and corrosion control for double stacked steamers		
	1 ea	Stainless steel hinged cover over control panel		
	1 ea	Cabinet base doors with locking provisions		
	1 ea	Correctional screws & tack welds		
30	1 ea	**CONVECTION STEAMER** Cleveland Range Packed: ea SteamChef 6 Convection Steamer, Gas, Boiler-Free, double stacked, on ES263044 equipment stand, (6) full size pan capacity per compartment, electromechanical controls, automatic drain & water level controls, KleanShield interior, standard treated & tap water connection, stainless steel exterior, 4" adjustable legs with flanged feet, (2) 32,000 BTU, UL, NSF, ENERGY STAR	$15,430.08	$15,430.08
	1 ea	1-year limited warranty, standard		
	1 ea	Gas type to be specified		
	1 ea	(2) 115v/60/1-ph, 4.0 amp each, standard		
	1 ea	Claris Water Treatment System, includes (1) pre-filter, (1) Claris X-large steam system, (1) Claris flow meter and (1) water test kit (see water quality requirements in price list)		
		Total		$391,210.41

CONFIDENTIALITY NOTICE: Privileged and/or confidential information may be contained in this message. If you are not the intended recipient of this electronic message, you are hereby notified that any disclosure, copying, distribution, or action taken in reliance on the contents of this document is strictly prohibited. If you receive this information in error, please notify the sender immediately and arrange for the destruction of this document.

Please Count, Open & Inspect entire contents BEFORE signing for shipments! If the boxes look damaged, note damaged items and/or shortages on the delivery receipt. REFUSE any damaged goods.

Acceptance: _____ Date: _____

Printed Name: _____

Item # _____
Project _____
Date _____

Tamper Resistant Coffee Urn - Twin 10 gallon

High Capacity: Two Independent Brewing Systems
High Security: No Exposed Fasteners

Model 67710
Electric

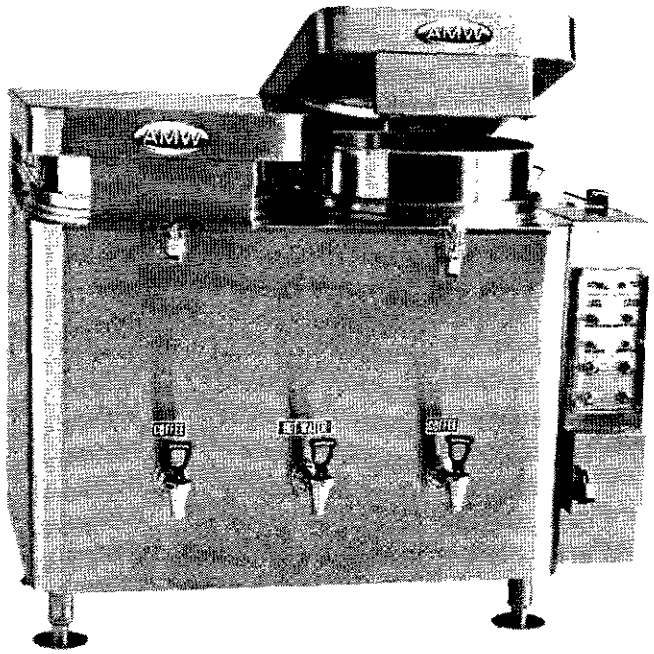

Features:

- **Will Exceed High Volume Demand Burst, Two Independent Brewing Systems**
  Two independent brewing heads brew into the 10 gallon (38L) liners simultaneously or independently. Brew heads are mounted under hinged lockable covers.
- **Innovative Indicators Eliminate Exterior Parts**
  Indicator lights replace gauge glasses. Water hot light replaces thermometer. Completely internal air agitation system for each liner.
- **Designed For Safety**
  Eliminates potential burn hazard with two layers of high density fiberglass insulated body.
- **Flanged Feet**
  Urn can be fastened to counter top to prevent tipping or movement
- **Tamper Resistant**
  All adjustable controls (timer, thermostats, sprayover flow control), are inside a lockable control box. Master on/off switch is behind a stainless steel, lockable panel. Control switches and pilot lights are protected behind a tamper resistant, one inch thick Lexan® cover plate.
- **Longer Average Life**
  Internal frame is all A.I.S.I. type 304, 18-8 stainless steel.
- **Saves Steps In Brewing**
  Two permanent stainless steel brew baskets, so filter paper is eliminated.

Coffee Urn - Tamper Resistant

High Security / High Capacity
Coffee Brewing Equipment

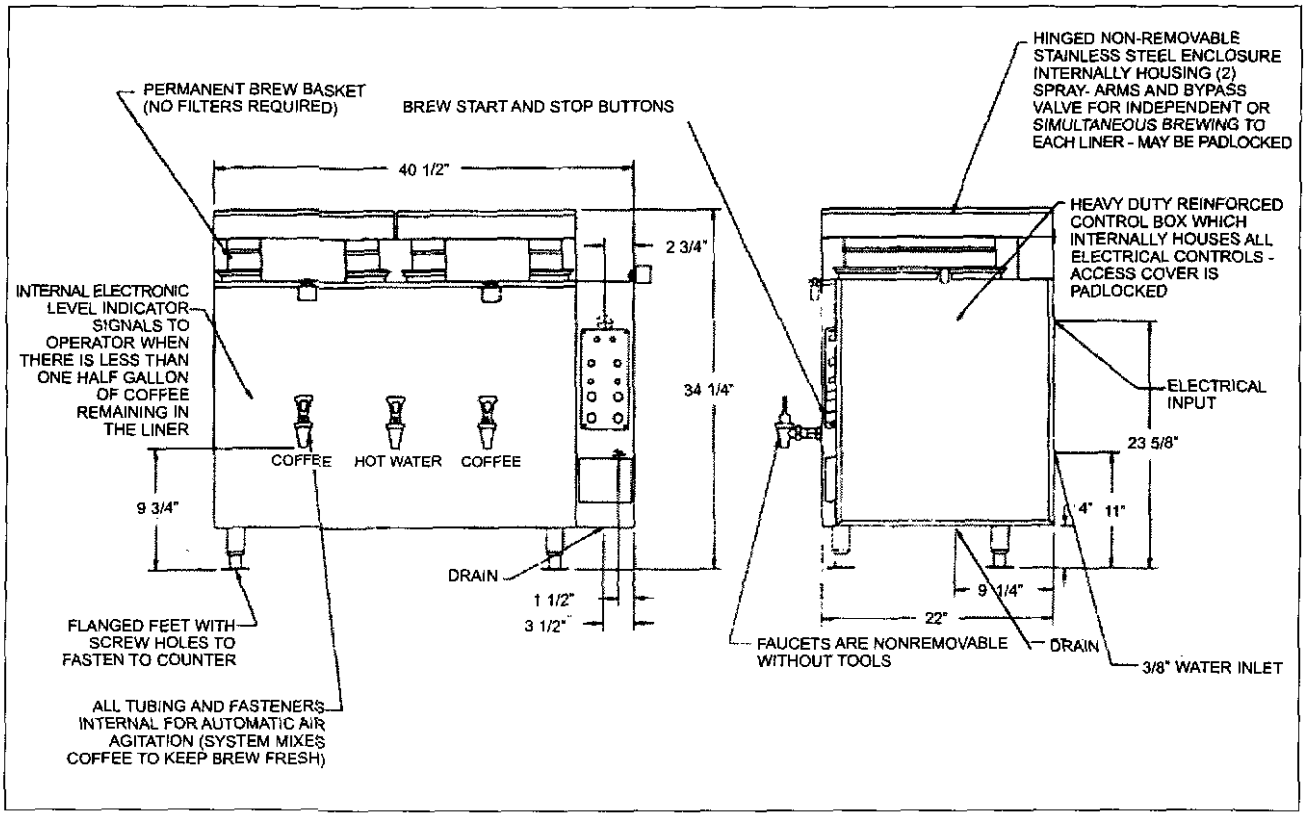

	67710			
Productivity, 50°F Inlet	40 gal. per hour			
Productivity, 130°F Inlet	80 gal. per hour			
Dimensions	40-1/2" W X 22" D X 34-1/4" H, (51" H With Cover Open)			
Electrical Options all models 15 KW	120/240V	1 Phase	3 Wire	63 Amps
	120/208V	1 Phase	3 Wire	72 Amps
	240V	3 Phase	3 Wire	36 Amps
	120/208V	3 Phase	4 Wire	42 Amps
	480V	3 Phase	3 Wire	18 Amps

GRINDMASTER CORPORATION

Grindmaster® Coffee Grinders and Brewers • PrecisionBrew™ Brewing Systems • Espressimo® Espresso Machines
Crathco® Hot Beverage Dispensers • Crathco® Cold and Frozen Beverage Dispensers • AMW Coffee and Tea Systems
Tel (502) 425-4776 • Fax (502) 425-4664 • 1-800-695-4500 (USA & Canada only)
P.O. Box 35020 • Louisville, KY 40232 • USA
www.grindmaster.com • email: info@grindmaster.com

© Grindmaster Corporation, 1995
PRINTED IN USA

0807 Form # AM-204-03

"FE" Series Automatic Coffee Urns

With today's demand for a cup of quality coffee, you need a Fast . . . Efficient and Dependable urn that can keep up with high volume customers. Both the "FE" and "CL" Automatic Coffee Urns extract the rich flavor of each coffee grind, bring out its full taste and aroma.

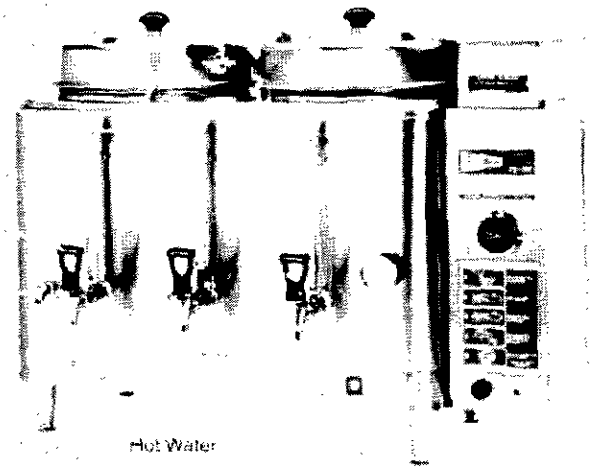

- ✔ **Adjustable By-Pass System** - Gives an operator the ability to adjust the strength of the coffee to bring out its natural robust and full body taste.
- ✔ **Automatic Refill** - Automatically replenishes the Urn jacket with fresh water as soon as it starts running low giving you piping hot water on demand.
- ✔ **Automatic Agitation** *(FE series only)* - At the end of each brew cycle, all FE urns automatically blend the coffee. Thereafter, just *"Push the Button and Walk Away"* the FE series agitates the coffee automatically.
- ✔ **Cycle Stop Switch** - Conveniently located on the front panel, the Cycle Stop Switch gives the operator the ability to stop the brew cycle midstream. It's also ideal for cleaning purposes.
- ✔ **Accurate Temperature Control** - Keeps coffee hot all the time.
- ✔ **Thermometer** - located on the front for the Urn, the thermometer indicates when the water is at optimum temperature for brewing coffee 197° - 204°.
- ✔ **Over Flow Tube** - In the event the water shut off valve malfunctions, the Over Flow Tube dispenses the excess water.
- ✔ **FE-200 - Two Brew Buttons** - For high and low volume periods, this feature allows you to brew either 1 or 2 lbs. of coffee at a time by the push of the 1 or 2 lb. brew button.
- ✔ **FE-75 and FE-100** - Brews in one pound batches
- ✔ **FE-300** - Brews in 3 pound batches
- ✔ **Durable Stainless Steel Finish**
- ✔ **Uses Tomlinson Faucet's**

				Dimensions					

Plumbing 1/4" water line required All urns are available with Steam: 15-30 PSI, 120V - 3 amps

*** FE-100G** - Available in Natural or L.P. Gas 32,000 BTU, 120V 3 Amps, Dimensions same as FE100 Steam

Special Voltage: 220V, 380V, 440V - Consult factory for details

"CL" Series Automatic Coffee Urns

- ✔ **Automatic Refill** - Automatically replenishes the Urn jacket with fresh water as soon as it starts running low giving you piping hot water on demand.
- ✔ **Automatic Agitation** With the *"CL" Series*, simply *"Push and Hold button"* for any specified period of time to agitate the coffee.
- ✔ **Electro Mechanical Selector Timer -**
- ✔ **Accurate Temperature Control** - Keeps coffee hot all the time.
- ✔ **TOMLINSON "No Drip" Faucet**

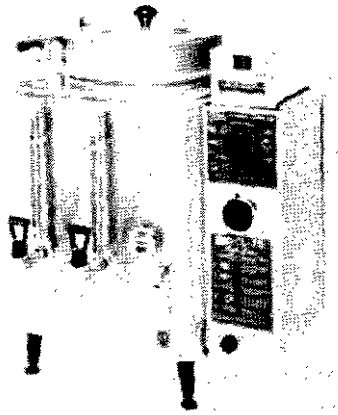

				Dimensions			

Plumbing: " water line required. Special voltage 220V, 380V, 440V - consult factory for details
Options: 3 phase - 4 wire. Double service with gauge glass

Manual Pour Over Coffee Urns

Manual Refill Water Valve
If a water outlet is available, this feature gives you the option to plumb water directly into the urn jacket.

In a class by itself, the MPO coffee urns are unique in their ability to brew coffee where water lines are not available. Constructed of high quality stainless steel, enjoy years of brewing endless gallons of coffee with this urn.

Optional: Truck Board

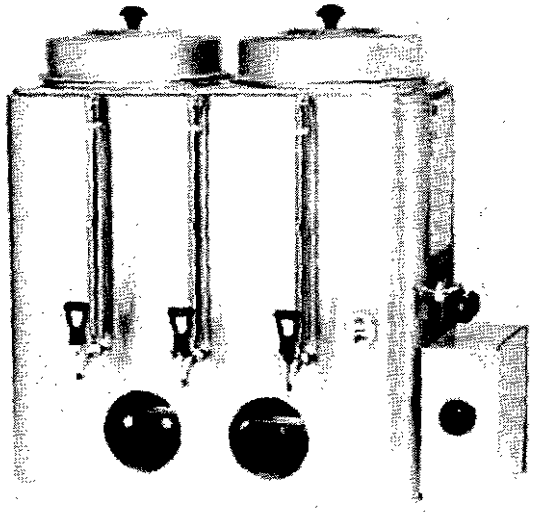

					1 Phase	3 Phase	

Depth: 17"
Width: MPO 3 and MPO 6 - 16"
MPO 303 and MPO 606 - 28"
Plumbing: " water line required

For Gas: Specify Natural or L.P.
Height: MPO 3 and MPO 303 - 27"
MPO 6 and MPO 606 - 32"
Electrical: 208/240V. Specify 1 phase or 3 phase

Chinese Hot Tea Urns

The Chinese Tea Urns have been part of the Cecilware Urn family for over ten years and have proven to be a reliable piece of equipment for brewing hot tea. Using Cecilware's classic Automatic Refill System to replenish the urn jacket with fresh water, steep or brew tea in the liner is simple and easy to do.

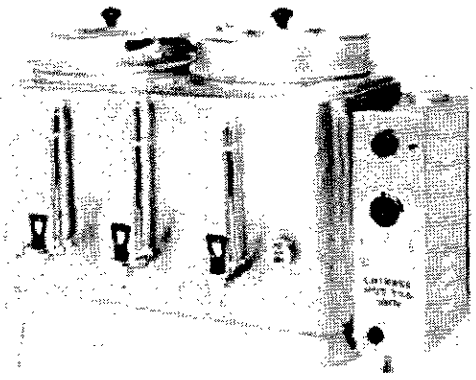

- ✔ Automatic Refill System
- ✔ Electro-mechanical Selector Timer
- ✔ Sight Glass
- ✔ Tomlinson "No Drip" Faucet
- ✔ Stainless Steel Body

Plumbing:

Automatic Water Boilers

Hot Water... As much as you want, When you want it . . . Economically.

The "ME" series is your reliable, dependable, economical source for a consistent supply of piping hot water for tea, soups and instant hot beverages.

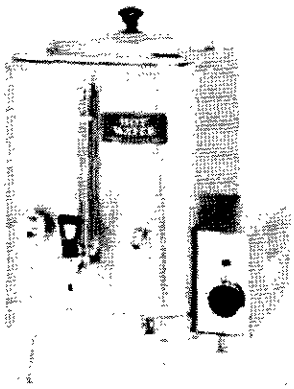

- ✔ Automatic Refill System
- ✔ Precision Multi-Setting Thermostat With Hold Setting
- ✔ Dial Thermometer For Exact Temperature Control
- ✔ Accurate Water Level Gauge
- ✔ Sight Glass
- ✔ Tomlinson "No Drip" Faucet
- ✔ Stainless Steel Body

* FOR WATER BOILERS WITH CHINESE LABELS, USE "C" PREFIX (E.G. CME-10E)

Depth:

Plumbing: water line required Gas: Natural & L.P.

Electrical: 208V 5.3 KW 240V 7KW

Diagrams

FE-75 STEAM

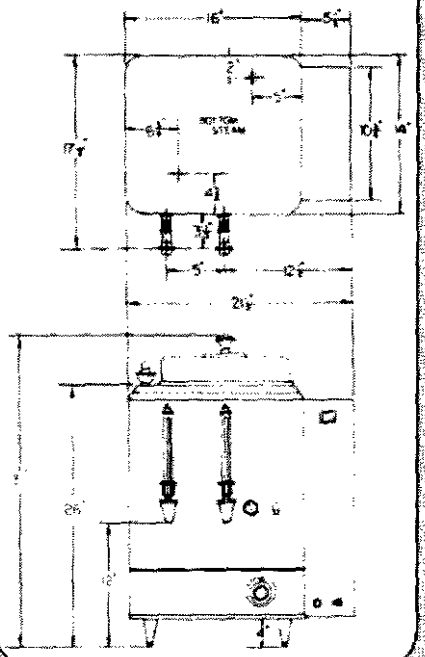

FE75, CL75, CH75 - ELECTRIC

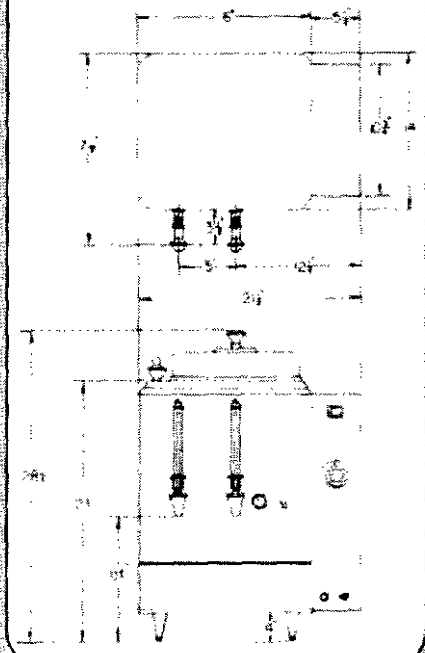

FE-100, CL-100, CH-100

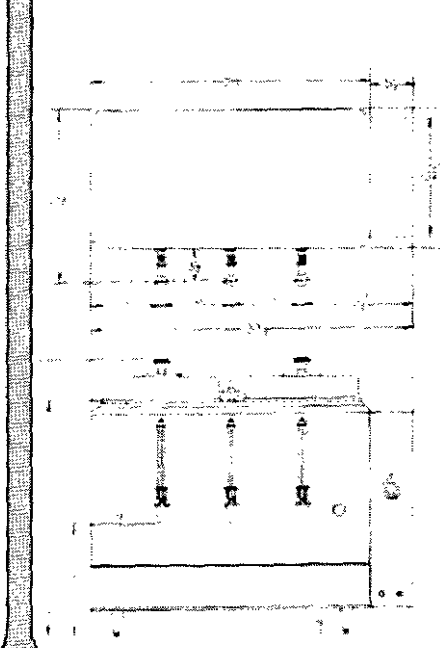

FE-100G

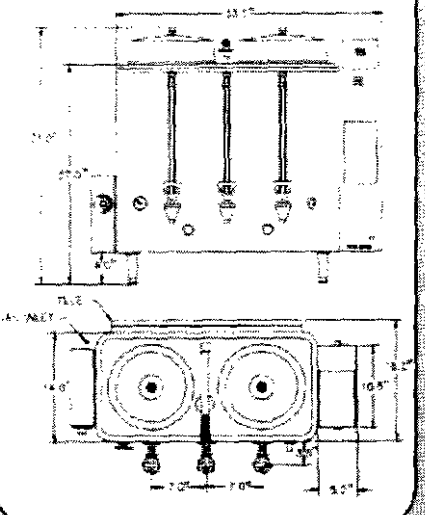

FE-300 ELECTRIC AND STEAM

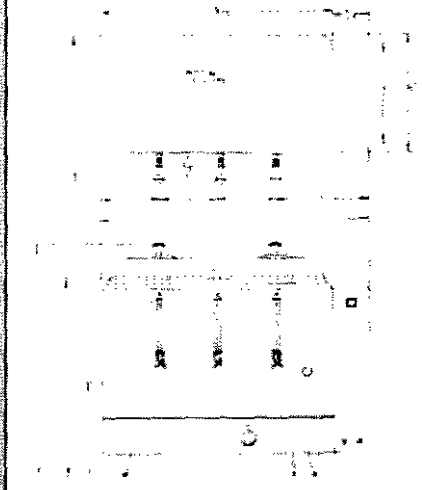

FE-200, CL-200, CH-200

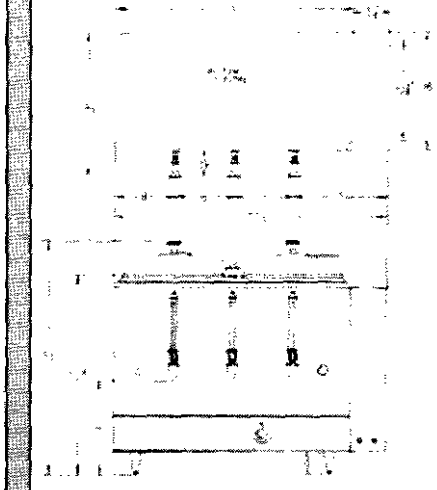

ME-10E, ME-15E

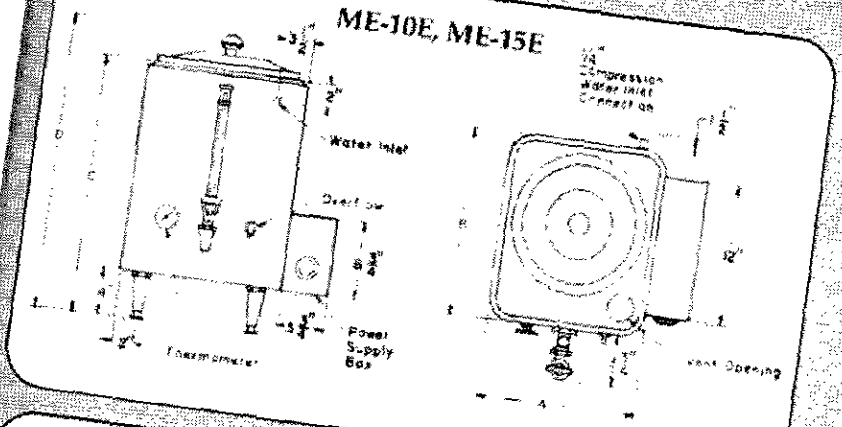

ME-10E	14"	16"	22¼"	25¼"
ME-15E	14"	16"	27¼"	30¼"
ME-10G	14"	16"	28"	31"
ME-15G	14"	16"	32"	35"

ME-10G / ME-15G

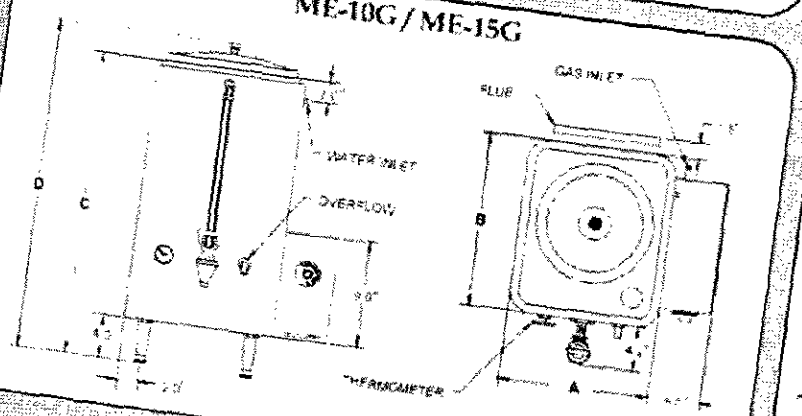

MPO-303G
MANUAL
POUR-OVER
COFFEE URN

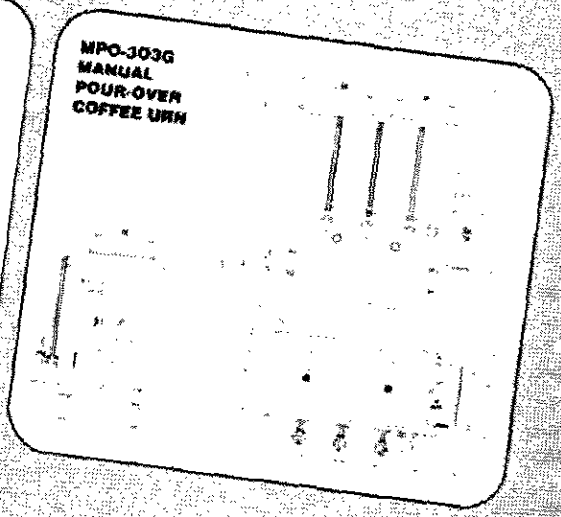

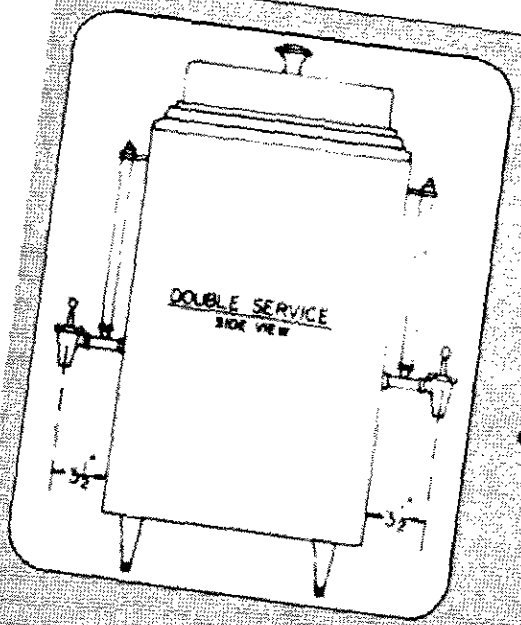

Urn Options

- ✔ Double Service for Single and Twin Urns, with Gauge Glass
- ✔ Dual or Half Brew on FE-75, FE-100, FE-300
- ✔ Faucet Extensions
- ✔ Truck and Shipboard Modification
- ✔ Special Voltages 220V, 380V, 440V
- ✔ 3 Phase Wiring

CECILWARE

Cecilware Corporation · 43-05 20th Ave. · LIC, NY 11105
Tel: 800.935.2211 718.932.1414 Fax: 718.932.7860
Visit us on the internet: www.cecilware.com

univex

Exacting Standards, Just Like yours, since 1948

Project | Item Number | Quantity

BC14 Bowl Cutter

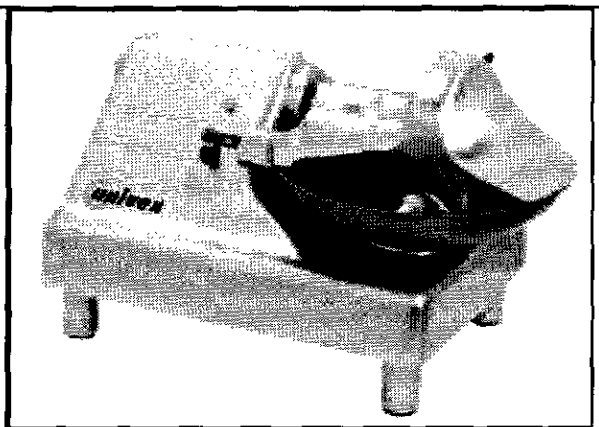

BC14

Bowl Cutter With 14" Bowl

Models:

☐ BC14: 14 inch Bowl Cutter

Features

- Perfect for pulled pork, parsley, root vegetables, meat, cheese, breads, spreads, dips and salads.
- 1/2 HP motor.
- 14" stainless steel bowl rotates at 24 RPM.
- Cutlery stainless steel twin blades make 3500 cuts per minute.
- Polished and anodized aluminum body.
- Simple operation: Pull / push on and off switch with illuminated indicator lamp when unit is on
- Bowl cover interlock prevents unit from running when cover is not closed and locked.
- Bowl sensing switch prevents operation without the bowl.
- Cord and plug.

Standard Accessories

- 14 inch 304 stainless steel bowl.
- Twin cutlery grade knives.

Optional Accessories

☐ 1000450 Plastic cover.

Warranty

- One-year, on-site parts & labor warranty

WARRANTY DETAILS

The BC14 bowl cutter carries a one-year, on-site parts and labor warranty against any flaws in materials and workmanship. This period begins on the date of purchase and, provided the unit is used in accordance with our instructions, is in full effect for one year from that date. Any work performed under this warranty must be performed between the hours of 8:00 a.m. and 5:00 p.m. local time, Monday through Friday. Univex will not pay for overtime charges for work performed other than during normal business hours. Damage incurred in transit or from installation error, accident, alteration or misuse is not covered. Univex shall not be liable for any consequential, compensatory, incidental, or special damages. Contact the Univex service department for any warranty claims.

univex | Univex Corporation www. Univexcorp.com | 3 Old Rockingham Rd Salem, NH 03079 USA Telephone (800) 258-6358 Fax: (800) 356-5614 Intl Tel. (603) 893-6191 Int'l Fax: (603) 893-1249

univex

Exacting Standards, Just Like yours, since 1948

Bowl Cutter BC14

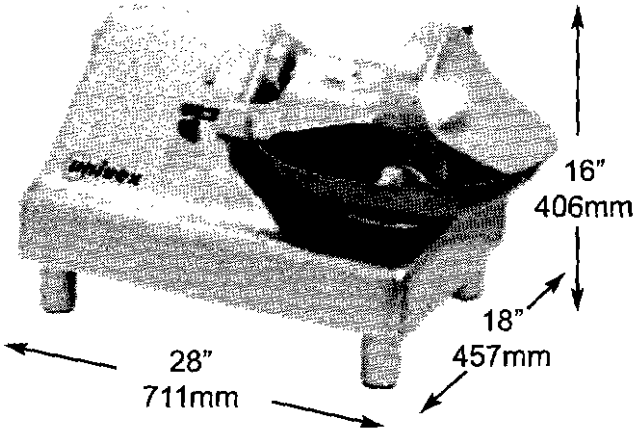

Dimensions:

Overall width:	28"	(711mm)
Overall length:	18"	(457mm)
Overall Height:	16"	(406mm)

Shipping Information:

Freight Class:	85	
Net Weight:	82 lb.	(37Kg)
Shipping Weight:	91 lb.	(41Kg)
Shipping Box Dimensions:		
Height:	18"	(457mm)
Width:	32"	(813mm)
Length:	25"	(635mm)

Electrical:
115V,60HZ,1PH
Other voltages available at no additional charge:
208-240V,60HZ,1PH
220-240V,50HZ, 1PH
208-240V, 60HZ, 3PH
220V, 50HZ, 3PH & 380V, 50HZ, 3PH

Motor:
1/2 HP capacitor start with starting relay. Speed 1725 RPM, ball bearing shaft.

Drive:
Knife shaft, ball bearing mounted, driven at 1725 RPM by a 8-ribbed poly "V" belt.

Knife Blades:
Cutlery stainless steel, 3500 cuts per minute.

Bowl:
14" (356mm) diameter, polished, die drawn, 304 stainless steel, 1:16 ratio driven at 24 RPM with "O" ring belt pulley reduction with 45:1 worm gear reduction.

Housing and Bowl Cover:
Cast aluminum. Polished and anodized.

Switch:
DPST pull / push on off.

Circuit Breaker:
6.0 amp manual reset.

Cord and Plug:
3-wire, 16 gauge, 5ft. (1524mm) long SJT cord with 3 prong molded plug.

Safety Features:
1. Bowl cover interlock prevents running when the cover is not closed and locked.
2. Bowl sensing switch prevents operating without the bowl.

Optional Accessories:

The following are available at an extra cost:

1000450 Cover: Heavy-duty clear plastic cover.

Printed in the USA 10/09

univex | Univex Corporation www. Univexcorp.com | 3 Old Rockingham Rd Salem, NH 03079 USA Telephone (800) 258-6358 Fax: (800) 356-5614 Intl Tel. (603) 893-6191 Int'l Fax: (603) 893-1249

HOBART
701 S Ridge Avenue, Troy, OH 45374
1-888-4HOBART • www.hobartcorp.com

FP350 FOOD PROCESSOR

STANDARD FEATURES

- Red OFF, Green ON Button
- Compact Design
- Angled Front
- Planetary Drive
- Large Full Size Feed Hopper
- All Aluminum Hopper and Housing
- Double Interlock Switch
- Plate Speed of 430 RPMs
- Decoring Screw

OPTIONS

- ❑ Maximum Security Correctional Package

ACCESSORIES

- ❑ 3-Pack Plates - 1/16, 5/32 slicer plates, 3/16 shredder plate, 1 wall rack
- ❑ 6-Pack Plates - 1/16, 5/32, 3/8, 7/32 slicer plates, 3/16 shredder plate and 3/8 dicer plate, 2 wall racks
- ❑ 3-Peg Wall Rack - designed to hold three plates for additional plate storage
- ❑ Slicer Plates: 1/16, 1/8, 5/32, 3/8, 3/8 HD and 7/32; 3/16 and 9/16 crimping plates
- ❑ Julienne Plates: 3/32, 3/16, 7/32, 3/8
- ❑ Dicer Grids: 9/32, 3/8, 1/2, 5/8, 3/4, and 1

*NOTE: The 3/4 dicer grid should be used with the 9/16 slicer plate only.

- ❑ Shredder Plates: 1/16, 3/32, 1/8, 3/16, 5/16, 7/32
- ❑ Grater Plate: Fine
- ❑ French Fry: 3/8

MODELS

- ❑ FP350 Continuous Feed Full Hopper Food Processor

Specifications, Details and Dimensions on Inside and Back.

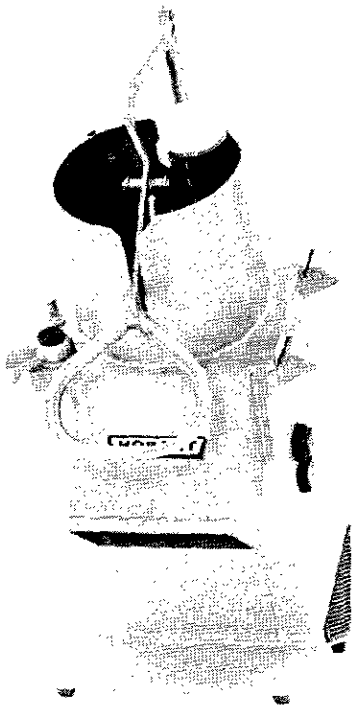

Standard with Pusher Plate

HOBART

FP350 FOOD PROCESSOR

FP350
FOOD PROCESSOR

HOBART
701 S Ridge Avenue, Troy, OH 45374
1-888-4HOBART • www.hobartcorp.com

SOLUTIONS/BENEFITS

Red OFF, Green ON Button
Ease of use
- Operator can readily recognize

Compact Design
Ease of use, small footprint, reduced labor, increased sanitation and productivity
- Occupies minimal counter space
- Unit and receiving pan fit on 27" deep counter
- Plates remove in seconds
- Metal cover removes without tools for ease of cleaning
- Produces consistent quality product results in seconds
- Production capability for 1,560 lbs. per hour

Angled Front
Operator convenience, ease of use
- 45° angle for ease of product loading
- Helps to reduce operator fatigue

Planetary Drive
Performance, reliability
- Helps to prevent stalling under heavy loads
- No rest times required between loads

Large Full Size Feed Hopper
Flexibility, convenience, reduced labor
- Supports processing capabilities for large variety of products
- Design permits continuous cutting of long products
- Eliminates precutting

All Aluminum Hopper and Housing
Durability, sanitation
- Anodized finish resists harsh cleaners
- Easy clean up

Double Interlock Switch
Protection
- Prevents machine from running when pusher plate swings away or is open

Plate Speed of 430 RPM
Product quality and consistency
- Precise cutting and dicing action without bruising or mashing of products

Decoring Screw
Quality, consistency
- Deflects products away from the plate hub for complete processing

3 PAK

1/16" Slicing Plate

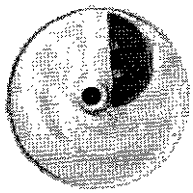

5/32" Slicing Plate

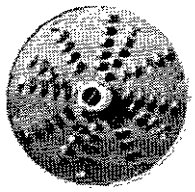

3/16" Shredder Plate

Wall Rack

6 PAK
3 Pack Plus

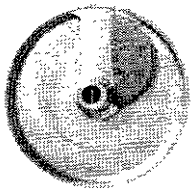

7/32" Slicing Plate

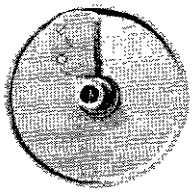

3/8" HD Slicing Plate

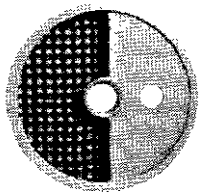

3/8" Dicing Plate

(2) Wall Racks

HOBART
701 S Ridge Avenue, Troy, OH 45374
1-888-4HOBART • www.hobartcorp.com

FP350 FOOD PROCESSOR

SPECIFICATIONS

DESIGN: Compact, conveniently designed at 45° angle for operator convenience. Base occupies minimal counter space. Housing constructed of anodized aluminum with rubber feet on base to prevent movement or skidding. Removable hopper front is burnished aluminum.

ELECTRICAL: 120/60/1, 3 Conductor power cord (14 AWG) is 6 feet in length.

MOTOR: 10 amps. Gear driven operating at 430 RPM output. 1 H.P. with overload protection.

SWITCHES: Easy to operate (red) OFF and (green) ON switch. Pusher plate and hopper front are interlocked.

STANDARD EQUIPMENT: Basic unit comes with deflector plate, decoring screw and cleaning brush.

WARRANTY: Unit has full one-year warranty on parts, labor and mileage against manufacturer's defects. Service contracts are available.

CUTTING TOOLS: Plates feature aluminum supports combined with cutlery grade stainless steel cutting surfaces.

WEIGHT: Net - 71 lbs. Approximate Shipping - 77 lbs.

ASSEMBLY PARTS

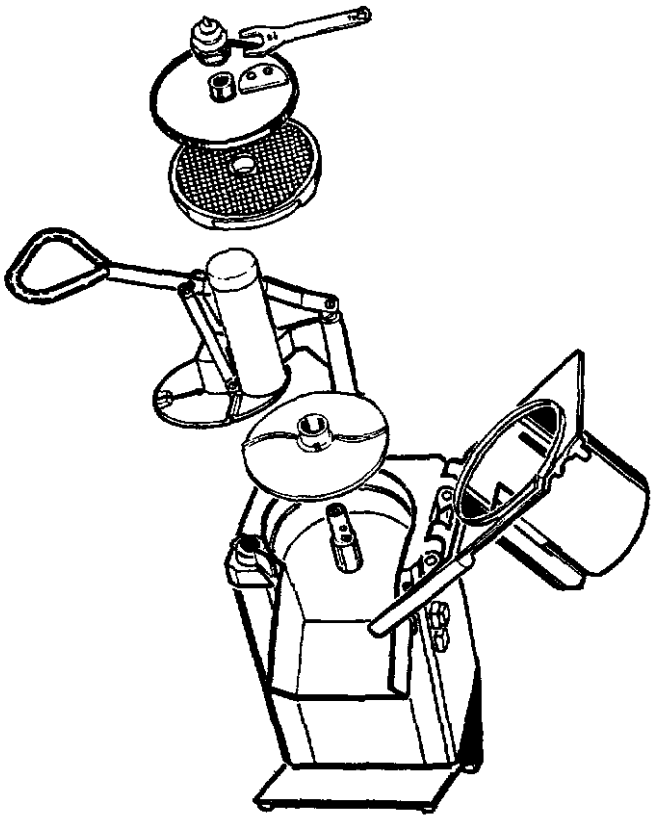

PRODUCT LOADING

Bulk Feeding

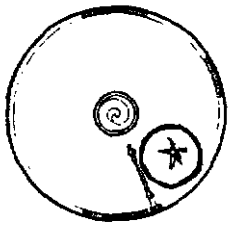

Directional for Definitive Cuts

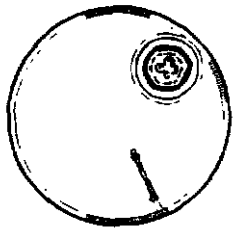

Tube Feeding for Long Products

FP350
FOOD PROCESSOR

HOBART
701 S Ridge Avenue, Troy, OH 45374
1-888-4HOBART • www.hobartcorp.com

DETAILS AND DIMENSIONS

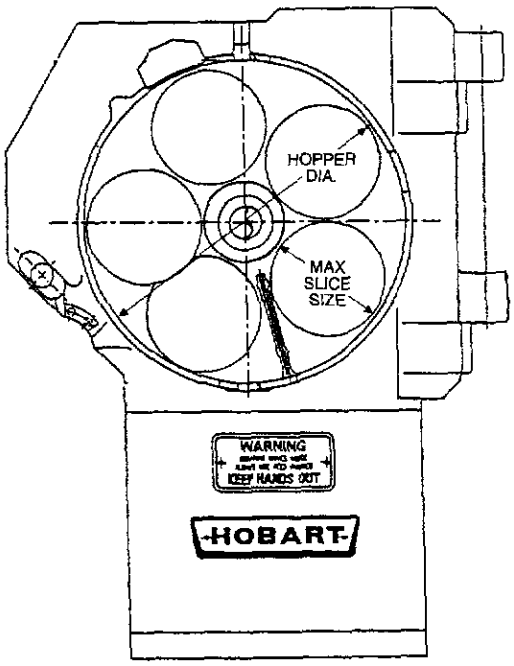

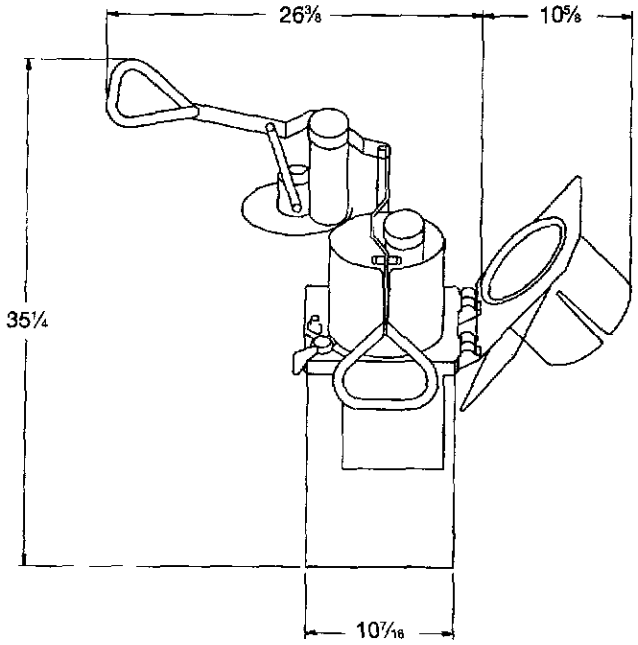

FP350

Hopper Diameter	7⅜"
Maximum Slice Size	3"
Usable Depth	7"
Feed Tube Diameter	2⁵⁄₁₆"

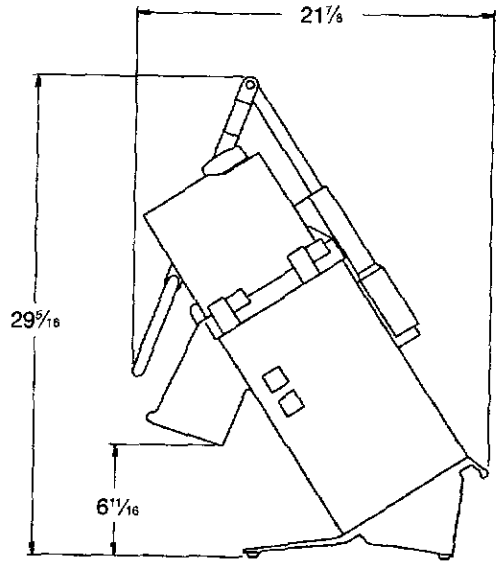

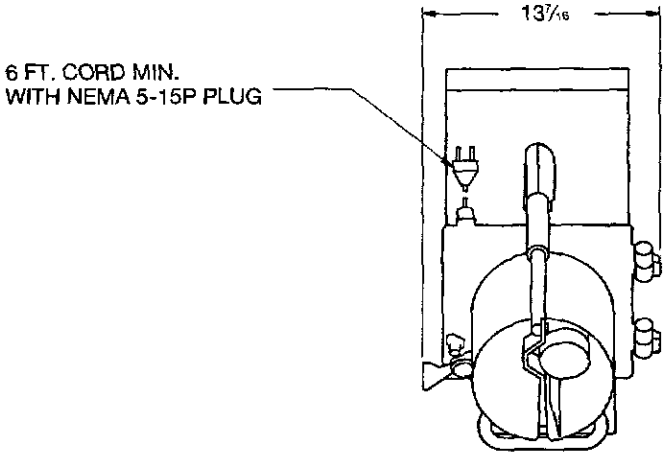

As continued product improvement is a policy of Hobart, specifications are subject to change without notice.

Quantity _____

C.S.I. Section 11400

HOBART
701 S Ridge Avenue, Troy, OH 45374
1-888-4HOBART • www.hobartcorp.com

84186 FOOD CUTTER

STANDARD FEATURES

- 1 H.P. Motor
- 15 Pound Capacity
- 18" Stainless Steel Bowl
- One-piece Burnished Aluminum Housing
- 1725 RPM Knife Rotation
- Bowl Cover Safety Interlock
- 20 RPM Bowl Rotation
- Double Cutlery Grade Stainless Steel Knives
- Pull/Push On/Off Switch
- 3" Stainless Steel Legs With Rubber Feet
- 6' Flexible Cord and Plug

OPTIONS

- ❑ #12 Attachment Hub
- ❑ Deluxe Bowl Cover (with attachment hub only)

ACCESSORIES

- ❑ Vegetable Slicer
- ❑ Meat Chopper Attachment

MODELS

- ❑ 84186 – Food Cutter with 18" Stainless Steel Bowl, Double Cutlery Grade Stainless Steel Knives with Stainless Steel Knife Comb and 3" Stainless Steel Legs with Rubber Feet
- ❑ 84186C – Maximum Security Correctional Package (115/60/1 and 208/60/3 with attachment hub only)

Specifications, Details and Dimensions on Reverse Side

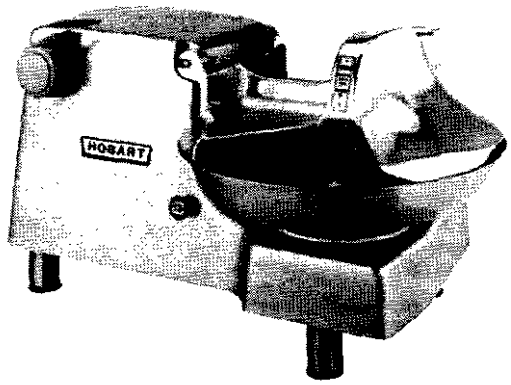

HOBART

84186 FOOD CUTTER

84186
FOOD CUTTER

HOBART
701 S Ridge Avenue, Troy, OH 45374
1-888-4HOBART • www.hobartcorp.com

SOLUTIONS/BENEFITS

1 H.P. Motor
Durability, Reliability

- Heavy-duty to meet the most demanding operations

Bowl Cover Safety Interlock
Safety

- Machine cannot be turned on until the bowl cover is locked down into position
- Bowl cover cannot be raised with the switch in the "ON" position

One-piece Burnished Aluminum Housing
Durability, Sanitation

- One-piece base has no cracks or crevices to allow food product to hide

Removable Bowl Cover, Knives and Bowl Without the Use of Tools
Ease of Cleaning, Ease of Use

- Easily removed to be taken to three compartment sink for thorough cleaning
- No tools needed to remove means less time and labor involved

Double Cutlery Grade Stainless Steel Knives
Durability, Performance

- Reduces food products to a uniformly small particle size for salads, spreads, bread crumbs and other imaginative recipes
- Holds an edge longer resulting in fewer sharpenings

SPECIFICATIONS

MOTOR: 1 H.P., with permanently lubricated ball bearings and totally enclosed within the machine. Single-phase is capacitor-start, induction-run type. Three-phase is polyphase squirrel-cage, induction-run type.

ELECTRICAL: 115/60/1, 230/60/1, 208/60/3 and 460/60/3 – U L Listed. Also available in 230/50/1 – Not submitted for U L Listing.

SWITCH: On/off switch is mechanically interlocked with bowl cover so that the switch cannot be operated unless bowl cover is locked down in position. On/off switch actuates a magnetic contactor.

CORD AND PLUG: 6 foot flexible cord with plug per NEMA configuration. Export models will be supplied with I.E.C. cord without plug.

BOWL: 18" inside diameter. Made of single piece of stainless steel, is easily removed for cleaning. Rotates at 20 RPM.

BOWL COVER: One-piece burnished aluminum casting, carefully fitted to the top of the bowl. It can be lifted to remove material from the bowl and can be removed for easy cleaning. Optional deluxe bowl cover available (with attachment hub only).

KNIVES: Rotate at 1725 RPM. The blades (made of special cutlery grade stainless steel) are secured to a hub as a unit, which may be removed from the knife shaft without change of knife clearance adjustment. Stainless steel knife comb included.

BASE: One-piece burnished aluminum casting with plated steel bottom cover (total enclosure).

STANDARD EQUIPMENT: Consists of Food Cutter with 18" stainless steel bowl, cutlery grade stainless steel knives with stainless steel knife comb and 3" stainless steel legs with rubber feet.

ATTACHMENT HUB: Speed – 256 RPM. Accommodates all Hobart No. 12 attachments.

ACCESSORIES: Vegetable Slicer and Meat Chopper Attachment.

WEIGHTS: Net – 140 lbs.; Shipping – 185 lbs.

WARRANTY: Unit has a full one-year warranty on parts, labor and mileage against manufacturer's defects.

DETAILS AND DIMENSIONS

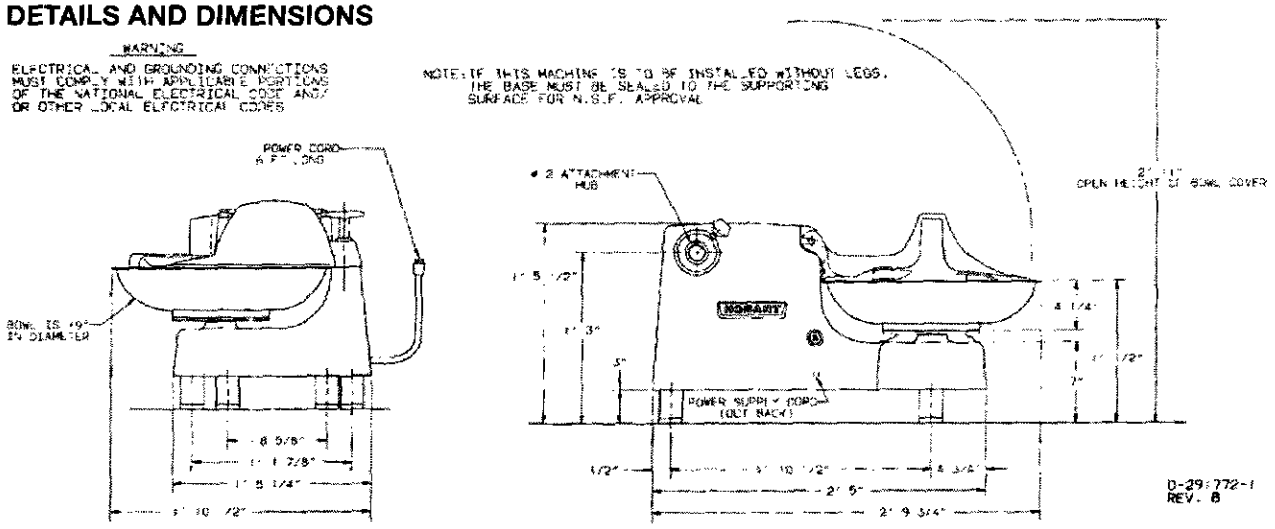

As continued product improvement is a policy of Hobart, specifications are subject to change without notice.

Varimixer

W100PL Food Mixer

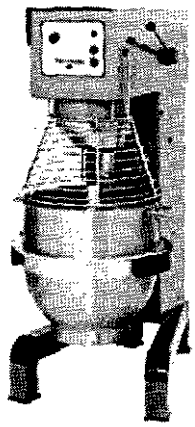

Standard Features

- Powerful 4 hp motor
- Variable speeds from 50 to 250 RPM
- Power Bowl Lift.
- Overload protection and no voltage release
- No bowl adaptors required for the down-size bowls
- Locking pin on tools instead of shaft.
- Neoprene feet to minimize walking and rusting
- Permanently lubricated planetary head and attachment hub case
- 15-minute timer with HOLD feature
- Stainless steel 100-qt. bowl, wire whip and dough hook
- Alloy flat beater
- Bowl Truck with Handle

Options & Accessories

- 40-qt. bowl and accessories
- 60-qt. bowl and accessories
- Bowl scraper in 100-qt., 60-qt. and 40-qt. sizes
- Stainless steel wing whip
- Pastry knife
- Mark IV programmable controls
- Ergo (tall column)
- Bowl Screen Ingredient Chute
- Stainless Steel Splash Ring

Specifications

Mixing system
The VARIMIXER W100PL is a planetary mixer with a variable speed drive system. The mixer frame consists of a column with welded-on feet, and a top traverse closed by a stainless steel cover.

The bowl is mounted in bowl arms which are manually raised and locked simultaneously - or lowered and opened, respectively. The column contains the motor and the bowl arm mechanism. The top traverse contains the transmission system consisting of the moveable pulleys, the intermediate belt drive and the planetary head. Start and stop push buttons are mounted on the front plate along with a 15-minute electrical timer with a HOLD feature. Mixing tools are mounted in a bayonet shaft in the planetary head.

Construction
Mixer frame of heavy-gauge, welded, rolled steel plate. Durable powder coated finish used on those surfaces not constructed of stainless steel. Top cover, splash apron and planetary head cap in heavy-gauge stainless steel. Molded PVC feet pads. Bowls in stainless steel. Mixing tools in cast aluminum or stainless steel.

Bayonet shaft in stainless steel. Variable speed V-belt transmission based on precision machined cast iron pulleys. Spring-loaded moveable pulleys in the variable speed drive for automatically adjusting of the tension of the special V-belt. Planetary mixer head of unique design. The planetary head revolves in heavy-duty ball and needle bearings around the main shaft. Precision milled beveled gear on the main shaft engages the bayonet shaft and the fixed internal gear ring through a double set of milled gears obtaining extra high torque capabilities of the mixing tools.
Precision milled cast iron bowl arms lower and raise the bowl and clamp it in a precise position relative to the mixing tool allowing for small tolerances between tool extremities and the bowl.

NSF

c UL us

14240 South Lakes Drive
Charlotte, NC 28273

Tel: 800-222-1138
Fax: 704-583-1703

www.varimixer.com
mixer@varimixer.com

We reserve the right to change specifications appearing in this bulletin without incurring any obligation for equipment previously or subsequently sold.

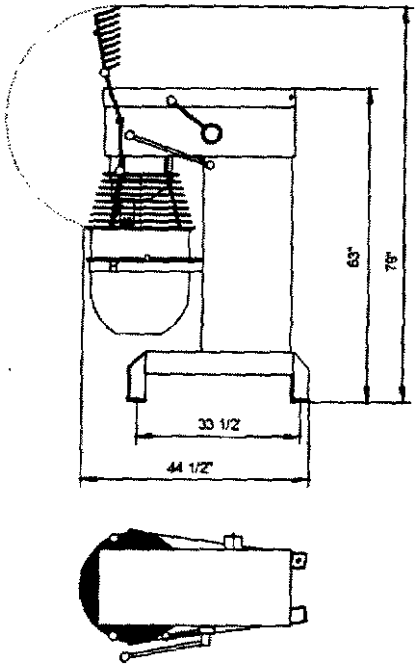

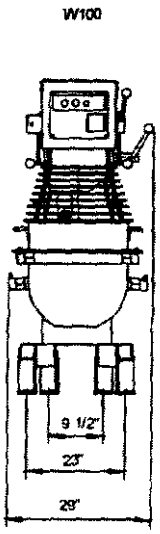

DIMENSIONS

MODEL NO.	CAPACITY	OVERALL SIZE (CM)			NET WEIGHT	SHIPPING INFORMATION					
		HEIGHT	WIDTH	LENGTH		WEIGHT	CLASS	CU. FT.	DIMENSIONS		
W100PL	Large Bowl 100-Qt., Small Bowl 40-Qt. and 60-Qt	63" (160.02 cm)	29" (73.66 cm)	44 1/2" (113.03 cm)	870 lbs. (395 kg)	981 lbs. (444.97 kg)	85	73	H 78" (198.12 cm)	W 33" (83.82 cm)	L 49" (124.4cm)

ELECTRICAL DATA FOR MOTOR

*208-240VAC Supply/60 HZ/3 Phase
Wires (including. Ground).....4
Motor Power .....HP 4
Amperes, full load .....A 13
No power cord included

MIXING SPEED

Agitator Speed .....Min. 50
Agitator Speed .....Max 250

%AR= weight of water
weight of flour

Batch size and/or speed reduction is required if any of the following conditions exist.
1. High Gluten Flour
2. AR % under 40%
3. Water Temperature under 65 Degrees F

*On the nominal motor voltage, + or - 10% tolerance is allowed.

** Also available in 480/60/3, 380/50/3, 220/50/3, 220/50/1, - not submitted for UL listing.

CAPACITY CHART

Mashed Potatoes	Whip or Beater	76 lbs.
Whipped Cream	Whip	20 Qts.
Muffins	Beater	125 lbs.
Layer Cake	Beater	125 lbs.
Pie Dough	Pastry Knife	95 lbs.
Pancake Batter	Batter Whip or Beater	44 Qts
Cookie Dough	Dough Beater or Hook	105 lbs.
Donuts, Yeast	Hook	150 lbs.
Donuts, Cake	Beater	140 lbs.
Bread Dough (65% AR)	Hook	155 lbs.
Pizza Dough (50% AR)	Hook	135 lbs.

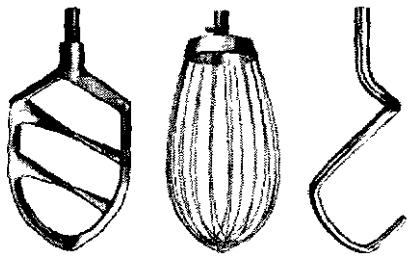

Standard tools: Beater, whip and hook.

14240 South Lakes Drive
Charlotte, NC 28273
Tel: 800-222-1138
Fax: 704-583-1703
www.varimixer.com
mixer@varimixer.com

We reserve the right to change specifications appearing in this bulletin without incurring any obligation for equipment previously or subsequently sold.

HOBART
701 S Ridge Avenue, Troy, OH 45374
1-888-4HOBART • www.hobartcorp.com

FP350 FOOD PROCESSOR

STANDARD FEATURES

- Red OFF, Green ON Button
- *Compact Design*
- Angled Front
- Planetary Drive
- Large Full Size Feed Hopper
- All Aluminum Hopper and Housing
- Double Interlock Switch
- Plate Speed of 430 RPMs
- Decoring Screw

OPTIONS

- ❑ Maximum Security Correctional Package

ACCESSORIES

- ❑ 3-Pack Plates - 1/16, 5/32 slicer plates, 3/16 shredder plate, 1 wall rack
- ❑ 6-Pack Plates - 1/16, 5/32, 3/8, 7/32 slicer plates, 3/16 shredder plate and 3/8 dicer plate, 2 wall racks
- ❑ 3-Peg Wall Rack - designed to hold three plates for additional plate storage
- ❑ Slicer Plates: 1/16, 1/8, 5/32, 3/8, 3/8 HD and 7/32; 3/16 and 9/16 crimping plates
- ❑ Julienne Plates: 3/32, 3/16, 7/32, 3/8
- ❑ Dicer Grids: 9/32, 3/8, 1/2, 5/8, 3/4, and 1

*NOTE: The 3/4 dicer grid should be used with the 9/16 slicer plate only.

- ❑ Shredder Plates: 1/16, 3/32, 1/8, 3/16, 5/16, 7/32
- ❑ Grater Plate: Fine
- ❑ French Fry: 3/8

MODELS

- ❑ FP350 Continuous Feed Full Hopper Food Processor

Specifications, Details and Dimensions on Inside and Back.

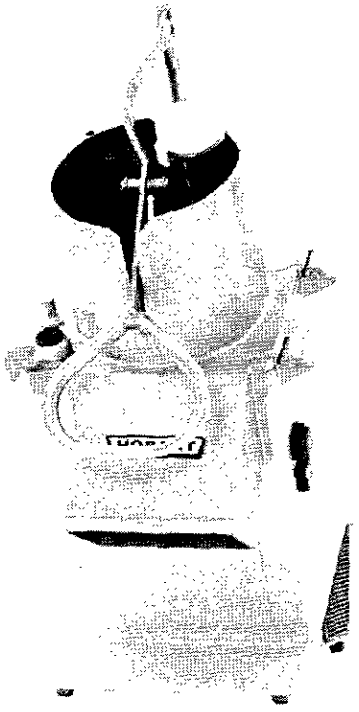

Standard with Pusher Plate

HOBART

FP350 FOOD PROCESSOR

FP350
FOOD PROCESSOR

HOBART
701 S Ridge Avenue, Troy, OH 45374
1-888-4HOBART • www.hobartcorp.com

SOLUTIONS/BENEFITS

Red OFF, Green ON Button
Ease of use
- Operator can readily recognize

Compact Design
Ease of use, small footprint, reduced labor, increased sanitation and productivity
- Occupies minimal counter space
- Unit and receiving pan fit on 27" deep counter
- Plates remove in seconds
- Metal cover removes without tools for ease of cleaning
- Produces consistent quality product results in seconds
- Production capability for 1,560 lbs. per hour

Angled Front
Operator convenience, ease of use
- 45° angle for ease of product loading
- Helps to reduce operator fatigue

Planetary Drive
Performance, reliability
- Helps to prevent stalling under heavy loads
- No rest times required between loads

Large Full Size Feed Hopper
Flexibility, convenience, reduced labor
- Supports processing capabilities for large variety of products
- Design permits continuous cutting of long products
- Eliminates precutting

All Aluminum Hopper and Housing
Durability, sanitation
- Anodized finish resists harsh cleaners
- Easy clean up

Double Interlock Switch
Protection
- Prevents machine from running when pusher plate swings away or is open

Plate Speed of 430 RPM
Product quality and consistency
- Precise cutting and dicing action without bruising or mashing of products

Decoring Screw
Quality, consistency
- Deflects products away from the plate hub for complete processing

3 PAK

1/16" Slicing Plate

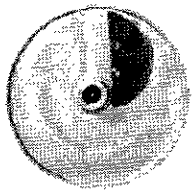

5/32" Slicing Plate

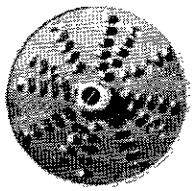

3/16" Shredder Plate

Wall Rack

6 PAK
3 Pack Plus

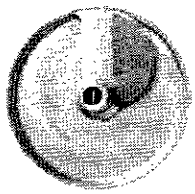

7/32" Slicing Plate

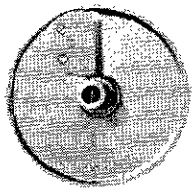

3/8" HD Slicing Plate

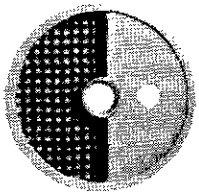

3/8" Dicing Plate

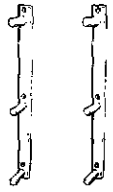

(2) Wall Racks

HOBART
701 S Ridge Avenue, Troy, OH 45374
1-888-4HOBART • www.hobartcorp.com

FP350 FOOD PROCESSOR

SPECIFICATIONS

DESIGN: Compact, conveniently designed at 45° angle for operator convenience. Base occupies minimal counter space. Housing constructed of anodized aluminum with rubber feet on base to prevent movement or skidding. Removable hopper front is burnished aluminum.

ELECTRICAL: 120/60/1, 3 Conductor power cord (14 AWG) is 6 feet in length.

MOTOR: 10 amps. Gear driven operating at 430 RPM output. 1 H.P. with overload protection.

SWITCHES: Easy to operate (red) OFF and (green) ON switch. Pusher plate and hopper front are interlocked.

STANDARD EQUIPMENT: Basic unit comes with deflector plate, decoring screw and cleaning brush.

WARRANTY: Unit has full one-year warranty on parts, labor and mileage against manufacturer's defects. Service contracts are available.

CUTTING TOOLS: Plates feature aluminum supports combined with cutlery grade stainless steel cutting surfaces.

WEIGHT: Net - 71 lbs. Approximate Shipping - 77 lbs.

ASSEMBLY PARTS

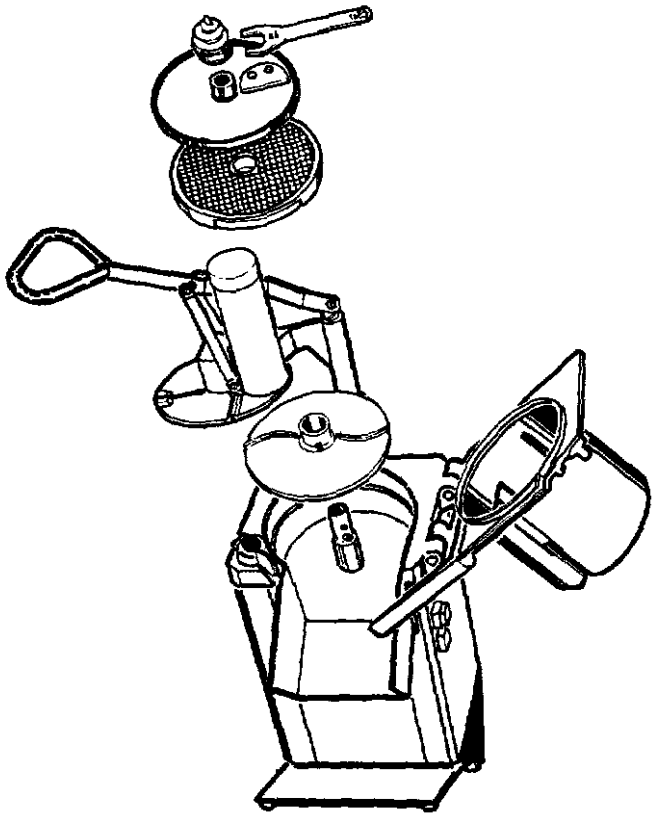

PRODUCT LOADING

Bulk Feeding

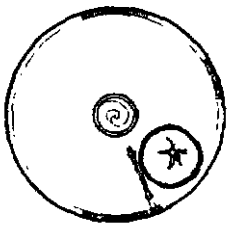

Directional for Definitive Cuts

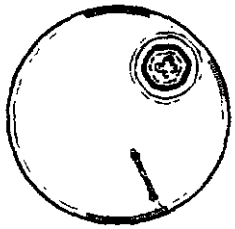

Tube Feeding for Long Products

FP350
FOOD PROCESSOR

HOBART
701 S Ridge Avenue, Troy, OH 45374
1-888-4HOBART • www.hobartcorp.com

DETAILS AND DIMENSIONS

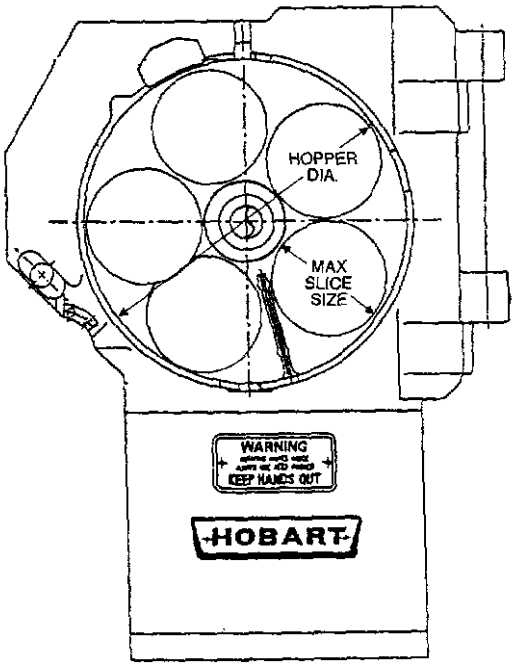

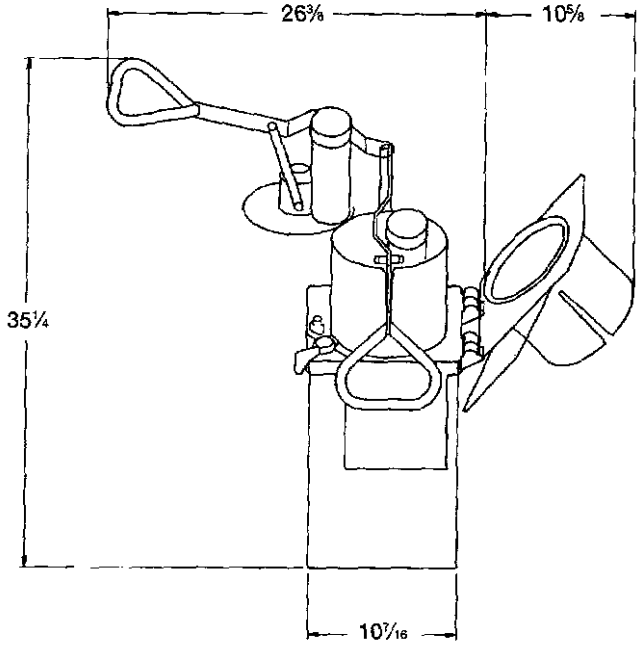

FP350	
Hopper Diameter	7⅞"
Maximum Slice Size	3"
Usable Depth	7"
Feed Tube Diameter	2⁵⁄₁₆"

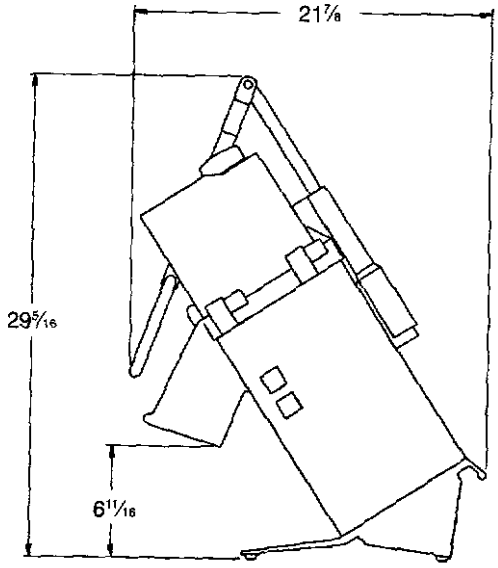

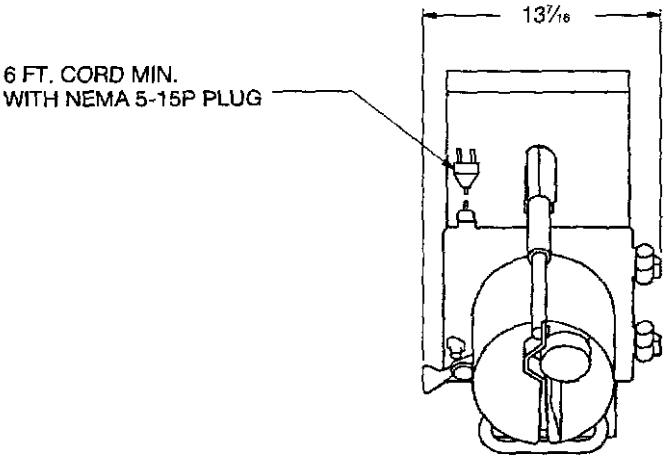

As continued product improvement is a policy of Hobart, specifications are subject to change without notice.

HOBART
701 S Ridge Avenue, Troy, OH 45374
1-888-4HOBART • www.hobartcorp.com

FP400 FOOD PROCESSOR

HOBART

STANDARD FEATURES

- Gear transmission.
- Anodized aluminum housing.
- Two-speed motor.
- Triple hopper/cover interlock.
- Two stationary front legs and two rear legs with casters for ease of mobility.
- Processes up to 88 lbs. per minute.
- Plate speeds 200 and 400 RPM.

ACCESSORIES

- ❑ 3-pack plates (1/16", 5/32" slicer plates, 3/16" shredder plate and wall rack).
- ❑ 6-pack plates (same as 3-pack plus 3/8", 7/32" slicer plates, 3/8" dicer plate and additional wall rack).
- ❑ 3-peg wall rack (designed to hold 3 plates).
- ❑ Stainless steel accessory cart.
- ❑ Adjustable height stainless steel lug cart.
- ❑ Stainless steel pan.
- ❑ Plastic pan.
- ❑ Over 40 individual plates available.

*NOTE: The 3/4 dicer grid or the 1" dicer grid should be used with the 9/16 slicer plate only.

MODEL

- ❑ FP400-1 (Must also select Feed Hopper Choice)

FEED HOPPER CHOICES

- ❑ Manual/Tubular Cylinder – PFD-CYL
  Choose one or both:
  - ❑ Manual Push Feed Assembly – MNLPFD-HANDLE
  - ❑ Tubular Feeder – TUBE-FEED
- ❑ Bulk Feed Hopper and Cylinder – FEED HOPPER (Complete).

Specifications, Details and Dimensions on Reverse Side.

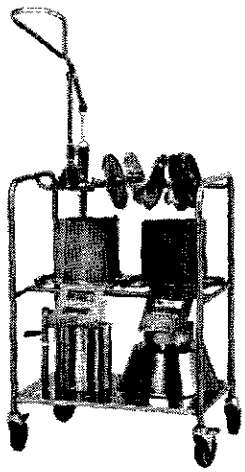

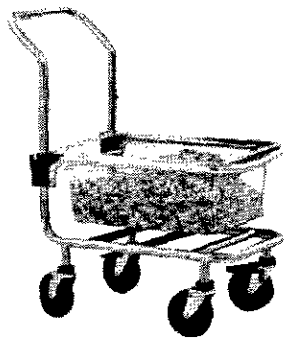

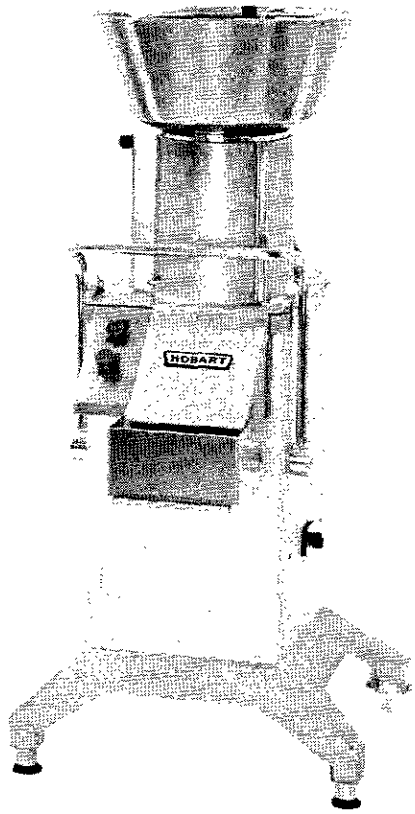

FP400 FOOD PROCESSOR

FP400
FOOD PROCESSOR

HOBART
701 S Ridge Avenue, Troy, OH 45374
1-888-4HOBART • www.hobartcorp.com

SPECIFICATION: 2 H.P. two speed motor, 200/400 RPM, anodized case aluminum housing. Plates are interchangeable with FP350 and are constructed of stainless steel blades with aluminum frames.

ELECTRICAL SPECIFICATIONS: 208-240/60/3, 7.5 amps, 6 foot, 3 conductor power cord (16 AWG). Furnished with NEMA L15-20P locking type plug.

WEIGHT: Net Lbs.: Machine 119 lb., Feed Cylinder 13 lb., Manual Push Feeder 11 lb., Continuous Feed Hopper 27 lb.

DETAILS AND DIMENSIONS

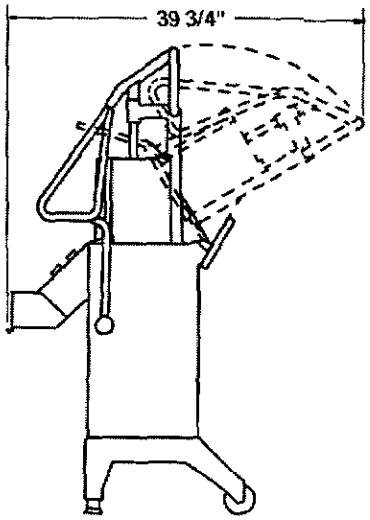

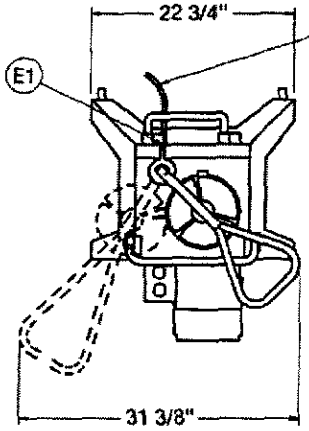

Not Pictured:
Tubular Feeder - TUBE-FEED
(Sold Separately)

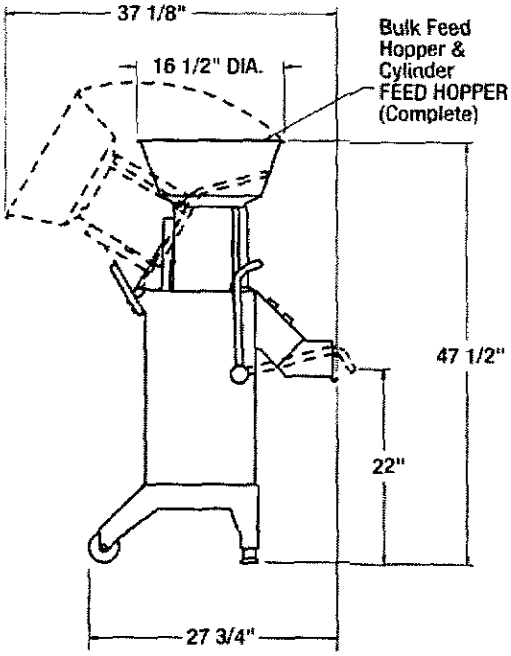

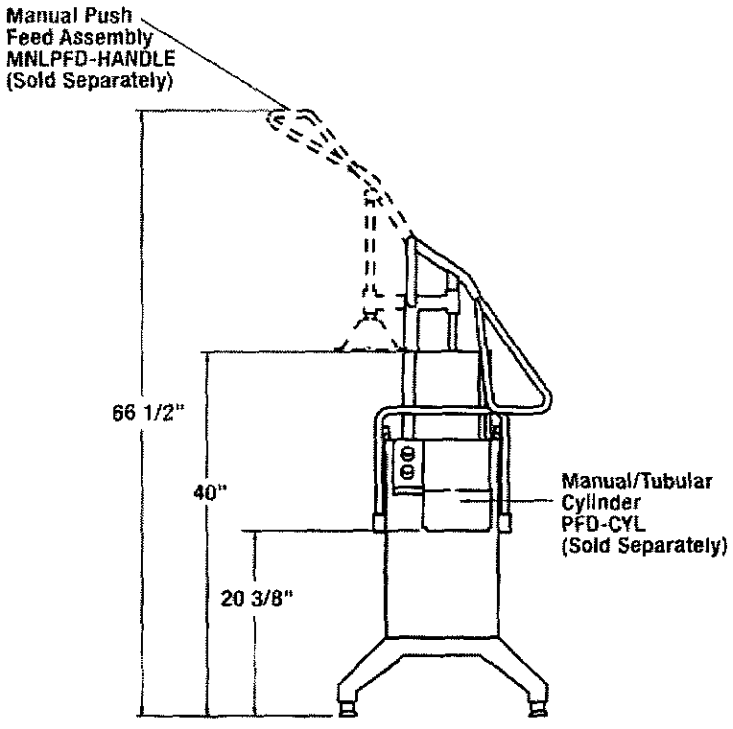

As continued product improvement is a policy of Hobart, specifications are subject to change without notice.

HOBART
701 S Ridge Avenue, Troy, OH 45374
1-888-4HOBART • www.hobartcorp.com

6430 & 6460 PEELER

STANDARD FEATURES

- Stainless steel housing for durability
- Silicon carbide abrasive disk easily removed for cleaning
- Stainless steel drive shaft
- Gray molded, heavy-duty hopper cover with opening to monitor product
- Peels 30 lbs. (Model 6430) or 50-60 lbs. (Model 6460) in one to three minutes
- Heavy-duty motors for high volume, long life
- ¾ H.P. (Model 6430) or 1 H.P. (Model 6460) motor
- V-belt direct speed drive
- Stainless steel construction
- NSF approved removable Lexan liner
- Synchronous 5 minute timer (single phase only)

ACCESSORIES

- ❑ Cabinet base and peel trap with stainless steel strainer
- ❑ Disposer stand (specify model FD3/50-6 disposer. Voltage for disposer must be the same as disposer stand).

MODEL

- ❑ 6430 – Peeler
- ❑ 6460 – Peeler

Specifications, Details and Dimensions on Inside and Back.

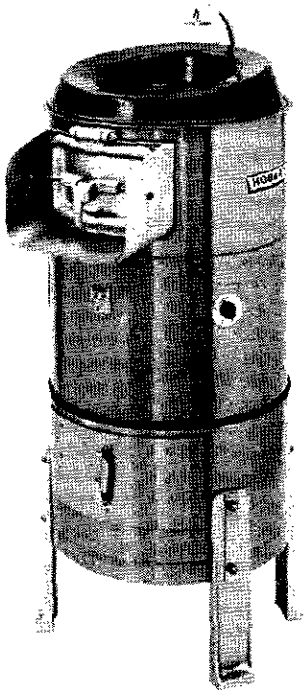

Shown with optional peel strainer and trap

HOBART

6430 & 6460 PEELER

6430 & 6460 PEELER

HOBART
701 S Ridge Avenue, Troy, OH 45374
1-888-4HOBART • www.hobartcorp.com

DETAILS, DIMENSIONS AND CONNECTIONS OF PEELER WITH PEEL TRAP UNIT

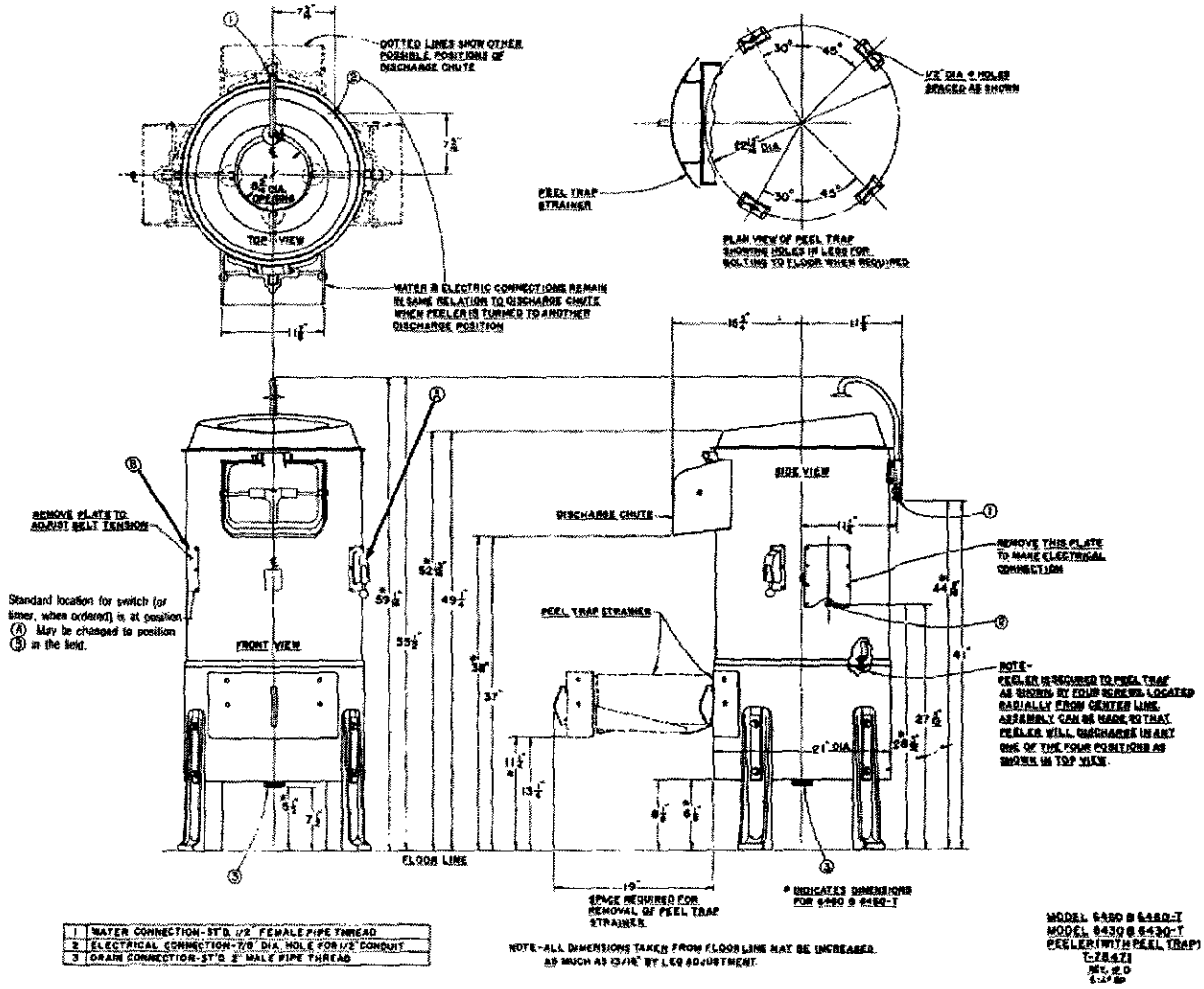

MODELS	6430	6460
Approximate Shipping Weight Peeler and Peel Trap Unit	201 lbs.	210 lbs.
Approximate Shipping Weight Peeler less Peel Trap Unit	147 lbs.	156 lbs.
Net Weight of Peeler and Peel Trap Unit	190 lbs.	198 lbs.

WARNING

ELECTRICAL AND GROUNDING CONNECTIONS MUST COMPLY WITH THE NATIONAL ELECTRICAL CODE AND/OR OTHER LOCAL ELECTRICAL CODES IN FORCE. PLUMBING CONNECTIONS MUST COMPLY WITH APPLICABLE SANITARY, SAFETY AND PLUMBING CODES IN FORCE.

HOBART
701 S Ridge Avenue, Troy, OH 45374
1-888-4HOBART • www.hobartcorp.com

6430 & 6460 PEELER

DETAILS, DIMENSIONS AND CONNECTIONS OF PEELER WITH DISPOSER STAND

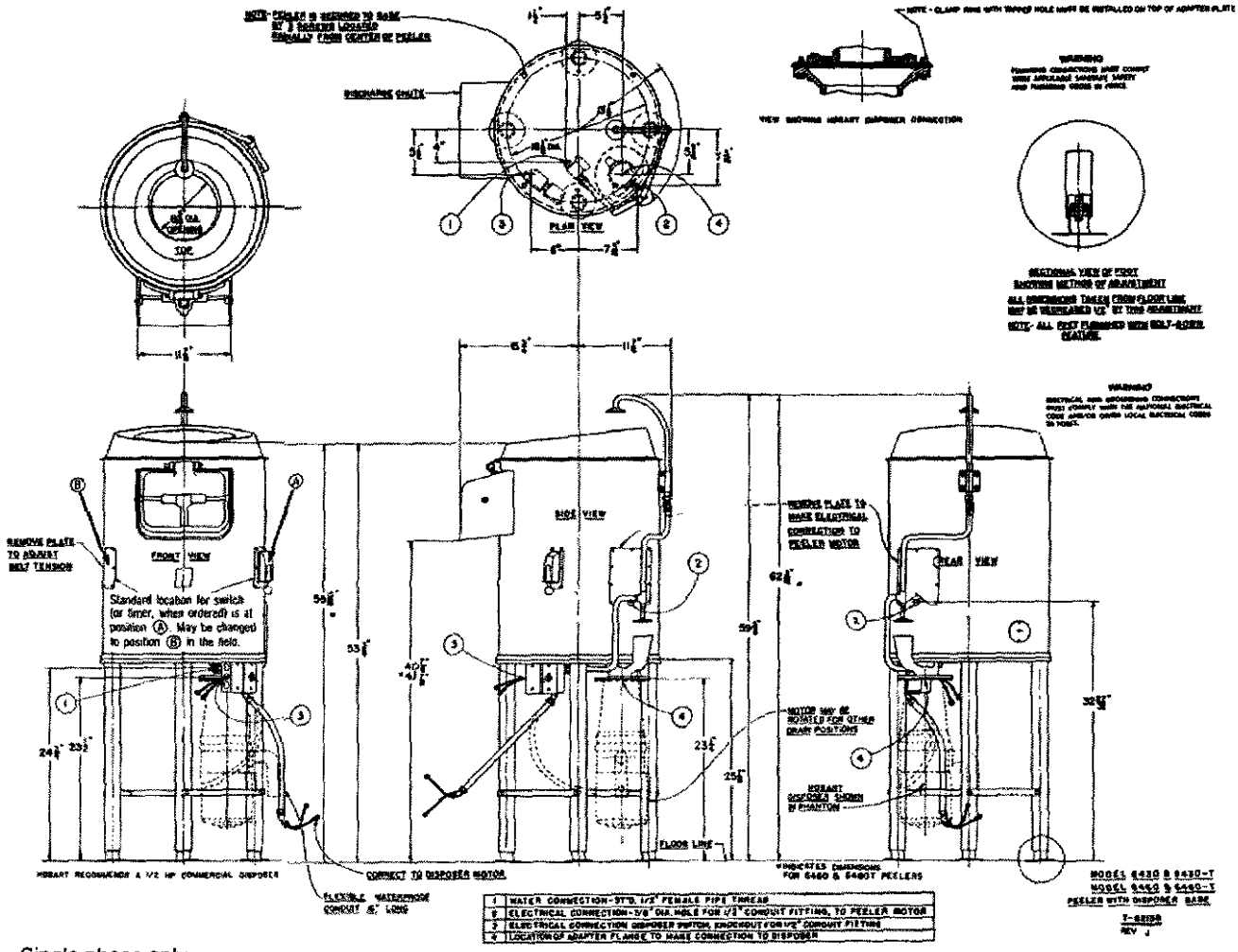

Single phase only.
DO NOT use three phase disposers.

MODELS	6430	6460
Net Weight of Peeler	142 lbs.	150 lbs.
Domestic Shipping Weight of Peeler	147 lbs.	156 lbs.
Net Weight of Disposer Stand	58 lbs.	60 lbs.
Domestic Shipping Weight of Disposer Stand	65 lbs.	70 lbs.

NOTE – Disposer Stand shipped in carton separate from Peeler

WARNING

ELECTRICAL AND GROUNDING CONNECTIONS MUST COMPLY WITH THE NATIONAL ELECTRICAL CODE AND/OR OTHER LOCAL ELECTRICAL CODES IN FORCE. PLUMBING CONNECTIONS MUST COMPLY WITH APPLICABLE SANITARY, SAFETY AND PLUMBING CODES IN FORCE.

6430 & 6460 PEELER

HOBART
701 S Ridge Avenue, Troy, OH 45374
1-888-4HOBART • www.hobartcorp.com

SPECIFICATIONS

MOTOR: ¾ H.P., Model 6430; 1 H.P. Model 6460. The motor features manual reset overload protection, grease-packed ball bearings, and ventilation within the peeler enclosure. Single phase is capacitor-start, induction run, and three phase is polyphase, squirrel-cage, induction-run type.

ELECTRICAL SPECIFICATIONS: 115/60/1, 200-230/60/1, 200-230/60/3, 460/60/3 UL Listed. 115/50/1, 220-240/50/1, 220-240/50/3, 380-415/50/3—Not submitted for UL Listing.

SWITCH: Manual tumbler type, located on right side of discharge chute as standard. Switch can be relocated to other side of chute if desired.

TIMER – Models 6430T and 6460T: Synchronous 5-minute timer, adjustable for any increments from ½ minute up to 5 minutes, with 15-second markings etched on a large timer dial. This timer is furnished only in single phase specifications as standard.

DRIVE: Multigrip, poly V-belt provides the direct speed reduction between motor and peeling disc. Belt adjustment may be accomplished from outside the machine. The stainless steel drive shaft is rigidly mounted on grease-packed ball bearings. Advanced designed triple protection sealing prevents entrance of water into shaft bearings.

PEELER UNIT: Cylindrical construction, heliarc-welded stainless steel with removable NSF approved Lexan liner. A one piece, reinforced plastic molded, lightweight, easily removable, positive locking hopper cover is provided for easy cleaning. Quick-opening removable aluminum hopper door and positive, cam-type pressure lock. Discharge chute is ball burnished cast aluminum. To facilitate installation, the peeler unit can be positioned at 90° intervals, in relation to the peel trap unit.

ABRASIVE DISC: An extremely lightweight fiberglass reinforced plastic disc is 20½ inches in diameter. The silicon-carbide abrasive is permanently bonded to the disc, assuring unequaled long service. Disc can be easily and quickly removed for cleaning by removing the lightweight hopper cover. Two angle mounted wipers provide positive movement of waste into the outlet.

WORKING CAPACITY: Model 6430 peels 30-33 pounds in one to three minutes. Model 6460 Peeler peels 50-60 pounds in similar time.

FINISH: Peeler and peel trap unit are glass-beaded stainless steel. Plastic molded hopper cover is gray. Door and handle, discharge chute, and legs are cast aluminum and ball burnished for durability. Bottom of peeler unit is cushioned in resilient rubber trim molding.

WATER INLET: The inlet is the air-gap type, mounted at the rear of the peeler unit at sufficient height to meet plumbing codes. The water from the inlet impinges on the curved surface of the hopper cover to form a fan pattern of water into the unit. This design promotes interior self-cleaning and forms a water curtain which prevents undesirable splash.

DETAILS, DIMENSIONS AND CONNECTIONS OF PEELER WITH DISPOSER STAND

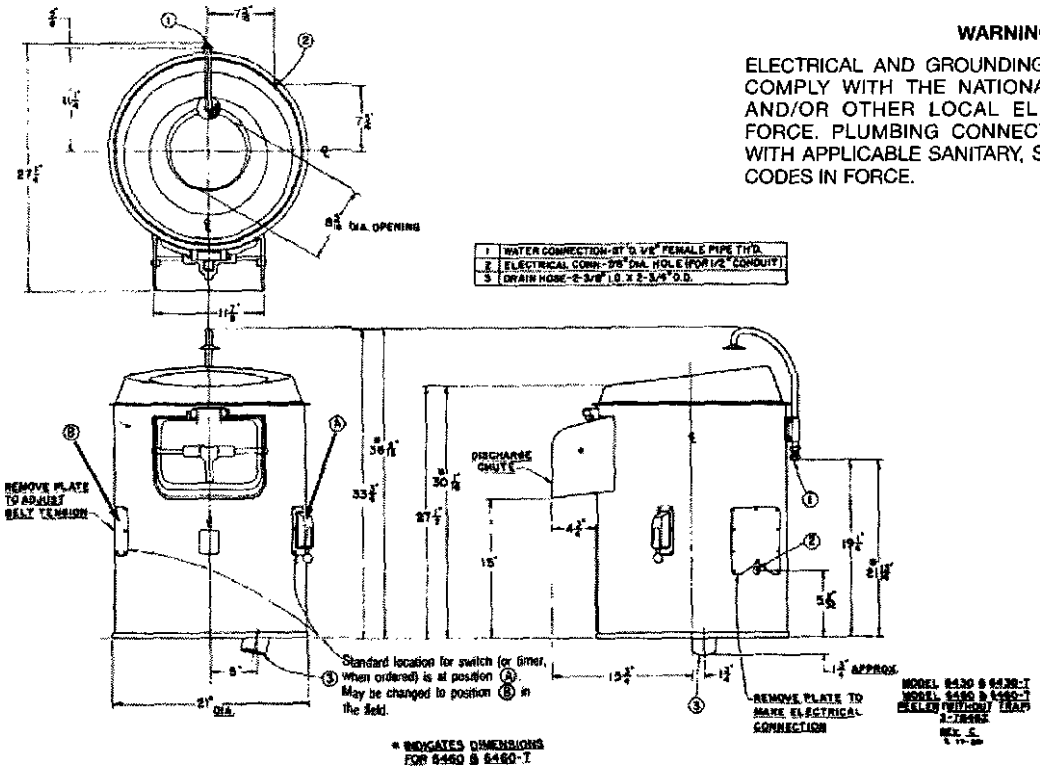

WARNING

ELECTRICAL AND GROUNDING CONNECTIONS MUST COMPLY WITH THE NATIONAL ELECTRICAL CODE AND/OR OTHER LOCAL ELECTRICAL CODES IN FORCE. PLUMBING CONNECTIONS MUST COMPLY WITH APPLICABLE SANITARY, SAFETY AND PLUMBING CODES IN FORCE.

As continued product improvement is a policy of Hobart, specifications are subject to change without notice.

Varimixer

W80A Food Mixer

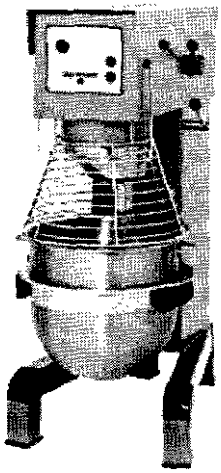

Standard Features

- Powerful 4 hp motor
- Variable speeds from 50 to 250 RPM
- By manually operating a single lever, the bowl raises and locks in position.
- Overload protection and no voltage release
- No bowl adaptors required for the down-size bowls
- #12 attachment hub with 198 rpm speed
- Locking pin on tools instead of shaft.
- Neoprene feet to minimize walking and rusting
- Permanently lubricated planetary head and attachment hub case
- 15-minute timer with HOLD feature
- Stainless steel 80-qt. bowl, wire whip and dough hook
- Alloy flat beater

Options & Accessories

- 40-qt. bowl and accessories
- Bowl scraper in 80-qt. and 40- qt. sizes
- Stainless steel wing whip
- Pastry knife
- Bowl Truck with handle
- Vegetable slicer and shredder plates
- Power Bowl Lift
- Meat grinder
- Mark IV programmable controls
- Ergo (tall column)
- Bowl Screen Ingredient Chute
- Stainless Steel Splash Ring

Specifications

Mixing system
The VARIMIXER W80A is a planetary mixer with a variable speed drive system. The mixer frame consists of a column with welded-on feet, and a top traverse closed by a stainless steel cover.
The bowl is mounted in bowl arms which are manually raised and locked simultaneously - or lowered and opened, respectively. The column contains the motor and the bowl arm mechanism. The top traverse contains the transmission system consisting of the moveable pulleys, the intermediate belt drive and the planetary head. Start and stop push buttons are mounted on the frontplate along with a 15-minute electrical timer with a HOLD feature. Mixing tools are mounted in a bayonet shaft in the planetary head.

Construction
Mixer frame of heavy-gauge, welded, rolled steel plate. Durable powder coated finish used on those surfaces not constructed of stainless steel. Top cover, splash apron and planetary head cap in heavy-gauge stainless steel. Molded PVC feet pads. Bowls in stainless steel. Mixing tools in cast aluminum or stainless steel. Bayonet shaft in stainless steel.

Variable speed V-belt transmission based on precision machined cast iron pulleys. Springloaded moveable pulleys in the variable speed drive for automatically adjusting of the tension of the special V-belt. Planetary mixer head of unique design. The planetary head revolves in heavy-duty ball and needle bearings around the main shaft. Precision milled beveled gear on the main shaft engages the bayonet shaft and the fixed internal gear ring through a double set of milled gears obtaining extra high torque capabilities of the mixing tools.
Precision milled cast iron bowl arms lower and raise the bowl and clamp it in a precise position relative to the mixing tool allowing for small tolerances between tool extremities and the bowl.

Attachment drive directly coupled to the motor securing maximum power output to the meat grinder or vegetable cutter. The 198 rpm high speed and the powerful motor give the meat grinder an unusually high capacity in relation to the size of the mixer.

14240 South Lakes Drive
Charlotte, NC 28273

Tel: 800-222-1138
Fax: 704-583-1703

www.varimixer.com
mixer@varimixer.com

We reserve the right to change specifications appearing in this bulletin without incurring any obligation for equipment previously or subsequently sold

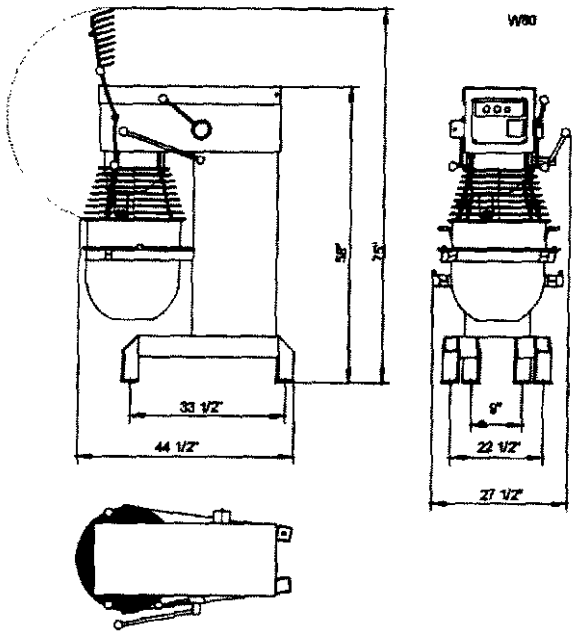

DIMENSIONS

MODEL NO.	CAPACITY	OVERALL SIZE (CM)			NET WEIGHT	SHIPPING INFORMATION					
		HEIGHT	WIDTH	LENGTH		WEIGHT	CLASS	CU. FT.	DIMENSIONS		
W80A	Large Bowl. 80-Qt. Small Bowl 40-Qt.	58" (147.32 cm)	27 1/2" (69.85 cm)	44 1/2" (113.03 cm)	750 lbs. (340 kg)	890 lbs. (403.70 kg)	85	65	H 70" (177.80 cm)	W 33" (83.82 cm)	L 49" (124.4 cm)

ELECTRICAL DATA FOR MOTOR

*208-240VAC Supply/60 HZ/3 Phase
Wires (including. Ground).....4
Motor Power .....HP 4
Amperes, full load .....A 13
No power cord included

MIXING SPEED

Agitator Speed .....Min. 50
Agitator Speed .....Max 250
Attachment Hub .....RPM 198

%AR= weight of water
weight of flour

Batch size and/or speed reduction is required if any of the following conditions exist.
1. High Gluten Flour
2. AR % under 40%
3. Water Temperature under 65 Degrees F

*On the nominal motor voltage, + or - 10% tolerance is allowed.

**Also available in 480/60/3, 380/50/3, 220/50/3, 220/50/1, - not submitted for UL listing.

CAPACITY CHART

Mashed Potatoes	Whip or Beater	58 lbs.
Whipped Cream	Whip	16 Qts.
Muffins	Beater	90 lbs.
Layer Cake	Beater	92 lbs.
Pie Dough	Pastry Knife	69 lbs.
Pancake Batter	Batter Whip or Beater	35 Qts
Cookie Dough	Dough Beater or Hook	68 lbs.
Donuts, Yeast	Hook	80 lbs.
Donuts, Cake	Beater	70 lbs.
Bread Dough (65% AR)	Hook	105 lbs.
Pizza Dough (50% AR)	Hook	90 lbs.

Standard tools: Whip, hook and beater.

14240 South Lakes Drive
Charlotte, NC 28273

Tel: 800-222-1138
Fax: 704-583-1703

www.varimixer.com
mixer@varimixer.com

We reserve the right to change specifications appearing in this bulletin without incurring any obligation for equipment previously or subsequently sold

Project Item # Quantity

SP80PL
80 Quart Mixer

NOW with electronic timer

Built into each mixer is the quality of design and workmanship synonymous with Globe.

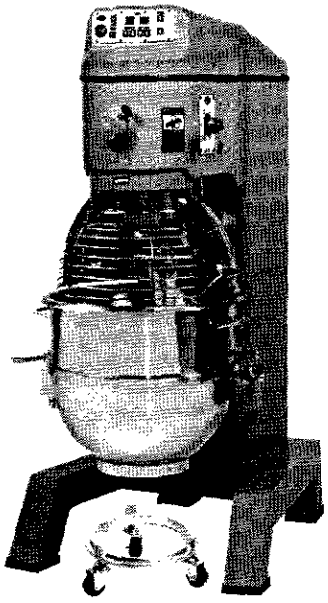

SP80PL

Model

❒ SP80PL- 80 Quart Mixer

Intertek

GLOBE FOOD EQUIPMENT COMPANY

80 Quart Mixer

SP80PL

Quality Construction
- Rigid cast iron body
- High torque direct gear drive transmission
- Oil bath transmission
- Heat-treated hardened steel alloy gears and shafts
- Stainless steel bowl guard with built in ingredient chute
- Industry standard #12 attachment hub
- Non-slip rubber feet
- NSF approved enamel gray paint

Standard Features
- Powerful 3 HP custom built motor
- Four fixed speeds
- Front mounted digital timer and controls
- Safety interlocked bowl guard and bowl lift
- Thermal overload protection
- Power bowl lift
- Automatic safety shut off provides superior motor and transmission protection

Standard Accessories
- 80 quart stainless steel bowl
- Flat beater (aluminum)
- Stainless steel wire whip
- Spiral dough hook (aluminum)
- Bowl truck

Optional Attachments/Accessories
❒ Vegetable slicer for #12 hub
❒ Shredder/grater for #12 hub
❒ Meat grinder for #12 hub
❒ Aileron (Wing) Whip
❒ 40 quart adapter kit
❒ Bowl scraper
❒ Correctional Package

Approved By:_____

Date:_____

Warranty
- Two-years parts and one-year labor

GLOBE FOOD EQUIPMENT COMPANY
www.globeslicers.com
2153 Dryden Rd.
Dayton, OH 45439
Phone: 937-299-5493
Phone: 800-347-5423
Fax: 937-299-4147

80 Quart Mixer — SP80PL

SP80PL

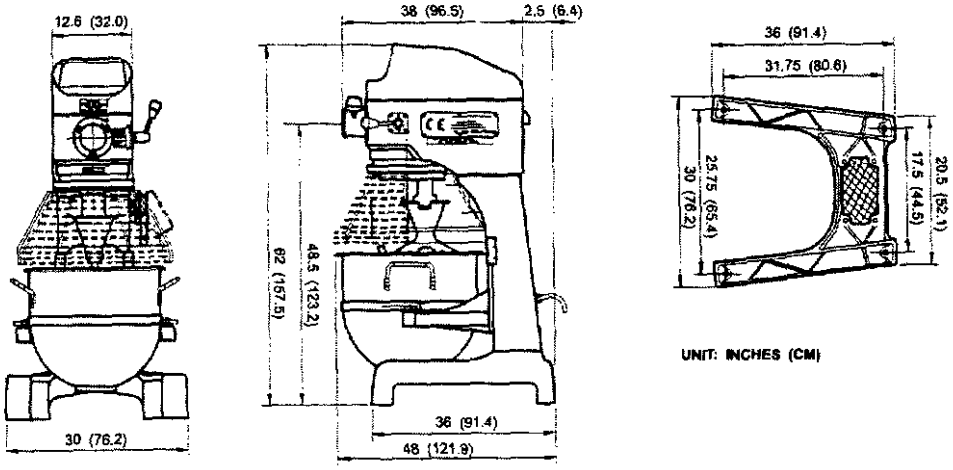

UNIT: INCHES (CM)

SPECIFICATIONS

Model	Motor	Volts	Amps	Transmission Type	Capacity	Controls	Power Bowl Lift	Agitator Speeds (RPMs) First	Agitator Speeds (RPMs) Second	Attachment Speeds (RPMs) First	Attachment Speeds (RPMs) Second
SP80PL (3 Phase)	3 HP	208/60/3	12	Gear	80 qt / 75.7L	Digital, Front mounted Timer & Controls	1/8 HP Motor	60	105	67	118
								Third	**Fourth**	**Third**	**Fourth**
								176	310	198	349

STANDARD FEATURES & ACCESSORIES:

- 80 Quart #304 series stainless steel bowl
- Aluminum spiral dough hook and flat beater
- Stainless steel wire whip
- Stainless steel bowl guard with built in ingredient chute
- Digital, front mounted timer and controls
- Heavy duty bowl truck
- #12 attachment hub
- Direct drive, fixed speed transmission provides high torque mixing power
- Thermal overload protection (automatic reset)
- NSF approved enamel gray paint
- 6 foot cable, hard wired

OPTIONAL ATTACHMENTS:

- Chopper Plate Sizes Available:
  - **CP02-12** 1/16" (2mm)
  - **CP04-12** 5/32" (4mm)
  - **CP05-12** 3/16" (5mm)
  - **CP06-12** 1/4" (6mm)
  - **CP08-12** 5/16" (8mm)
  - **CP10-12** 3/8" (10mm)
  - **CP12-12** 1/2" (12mm)
  - **CP14-12** 9/16" (14mm)
  - **CP16-12** 5/8" (16mm)
  - **CP18-12** 11/16" (18mm)
  - **CP00-12** Stuffing Plate
- **XST12** 1/2" stuffing tube (sheep)
- **XST34** 3/4" stuffing tube (hog)
- **XXHDWHIP80-4**, 4mm reinforced stainless steel, heavy duty wire whip
- **XXHDWHIP80-5**, 5mm stainless steel, heavy duty wire whip
- **XXAWHIP-20** Aileron (Wing) Whip
- **XMCA-SS** Meat Grinder Assembly (Polished stainless steel cylinder, worm gear, ring, and pan. Includes knife, 3/16" plate, stainless steel pan, and pusher.)
- **XXCORR80** Correctional package includes tamper resistant external fasteners.
- **XVSGH** 9" Slicer/Shredder/ Grater Housing Only (no plates included-must select from plates below)
- **XASP** Adjustable slicing plate
- Shredding/Grating Plates:
  - **XSP332*** 3/32" (2.3mm)
  - **XSP316*** 3/16" (4.7mm)
  - **XSP14*** 1/4" (6.3mm)
  - **XSP516*** 5/16" (7.9mm)
  - **XSP12*** 1/2" (12.7mm)
  - **XGP*** Grating plate
- **XPH** Plate holder -*only 1 required

DIMENSIONS & SHIPPING INFORMATION

Cartons are reinforced for shipping. The weight and dimensions of this reinforced carton are included below and may vary from shipment to shipment.
This product ships on a pallet.

Model	Foot Print	Overall Dimensions	Net Weight	Shipping Dimensions	Shipping Weight
SP80PL	30" D x 36" W (76.2 cm x 91.4 cm)	48" L x 30" W x 62" H (122 cm x 76 cm x 158 cm)	1,003 lbs. (455 kg)	48" W x 48" D x 76" H (122 cm x 122 cm x 193 cm)	1,270 lbs. (575 kg)

Freight Class 85

GLOBE FOOD EQUIPMENT COMPANY
www.globeslicers.com
2153 Dryden Rd.
Dayton, OH 45439
Phone: 937-299-5493
Phone: 800-347-5423
Fax: 937-299-4147

Printed in U.S.A. 11-2011 Ver. 2.1011 Rev. 0 GFE1011 *Specifications are subject to change without notice.*

VICTORY
110 Woodcrest Road, Cherry Hill, NJ 08003-3648
856.428.4200 • 800.523.5008 • Fax: 856.428.7299
www.victoryrefrigeration.com • email: sales@victoryrefrigeration.com

PROJECT: _____
LOCATION: _____
ITEM #: _____
QUANTITY: _____

V-SERIES™

SOLID DOOR TOP MOUNT REACH-IN FREEZERS

STANDARD FEATURES

- New V-SERIES™ Electronic Control with SUPERCOOL Mode
- High Performance, Balanced, Top-Mounted Refrigeration
- Unique Magnetic Proximity Door Switch Activates Lighting
- Anti Corrosion Coated Evaporator Coil
- Stainless Steel Front and Wrap Around Sides
- Aluminum Interior and Floor
- Environmentally Safe R-404A Refrigerant
- 2.5" Min. Foamed-in-Place Polyurethane Insulation
- Self-Closing Doors with 120° Hold Open Feature
- One Piece, Snap-In Magnetic Door Gasket(s)
- Door Lock(s) Standard
- Sleek, Ergonomic, Easy Grip Horizontal Door Handle(s)
- Three (3) Epoxy Coated Wire Shelves per Section
- Accommodates 18" X 26" or 12" X 20" pans
- 6" Overall Height Casters (Set of 4)
- Cam-Lift Hinges
- Recessed Interior Incandescent Lighting
- 10' Cord and Plug (See Electrical Data for Details)

OPTIONS AND ACCESSORIES

- Change Door Swing
- Expansion Valve Technology
- Fluorescent Lighting (Standard on Glass Door Models)
- LED Lighting
- Stainless Steel Finished Back
- 6" Legs in Lieu of Casters
- 4" Overall Height Casters (Set of 4)
- Kit with Universal Pan Slides
- Kit with Rod Type Pan Slides
- Kit with Angle Type Pan Slides
- 220/50 Hz, 220/60 Hz Voltages
- Remote Models (Standard with Legs)
- Extended Warranty
- Extra Shelves

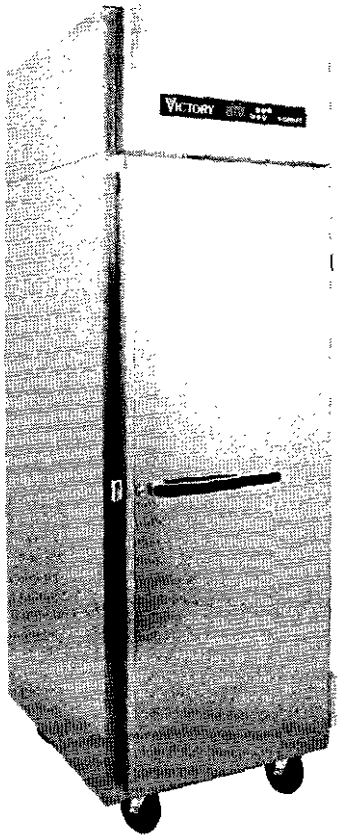

VF-SA-1D

MODELS		
	FULL-DOOR	HALF-DOOR
SOLID DOOR	VF-SA-1D*	VF-SA-1D-HD
	VF-SA-2D*	VF-SA-2D-HD
	VF-SA-3D	VF-SA-3D-HD

* Noted models are ENERGY STAR® listed. Please refer to www.energystar.gov to view the most up-to-date product listing and performance data.

1 Year Parts And Labor
5 Year Compressor Part Warranty

Victory Refrigeration specification sheets are available online at **www.victoryrefrigeration.com**

APPROVALS:

VICTORY

SOLID DOOR TOP MOUNT REACH-IN FREEZERS

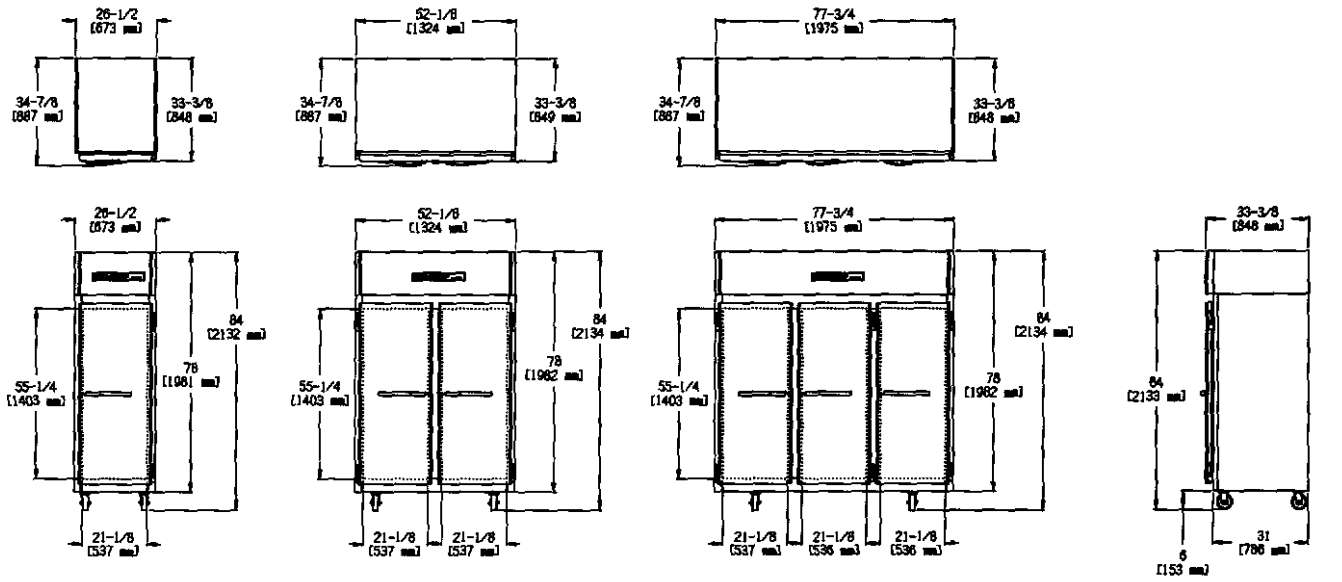

We reserve the right to change specifications and product design without notice. Such revisions do not entitle the buyer to corresponding changes, improvements, additions or replacements for previously purchased equipment.

Dimensional tolerances +/- ¼". Metric dimensions (MM)

V-SERIES™ CABINET CONSTRUCTION

The cabinet front, doors, grills and sides are constructed of polished stainless steel with the inside walls and bottom in aluminum. There is a minimum of 2.5" polyurethane foam insulation throughout (3.5" on the bottom) to ensure energy efficiency. The front grill is removable (snap-on / snap-off, no tools required) allowing easy access for cleaning the condenser. Standard lighting is recessed incandescent on solid door models.

V-SERIES™ DOOR CONSTRUCTION

The solid doors are constructed with a heavy gauge, polished stainless steel exterior and a durable ABS plastic liner. Each solid door is provided with a lock and an ergonomically correct handle. A unique magnetic proximity door switch controls the lighting on the solid door models. Cam-lift door hinges are self-closing and have a hold-open feature at 120°. Snap in place, one piece magnetic gasket(s). One section cabinets feature field reversible doors. Two and three section cabinets can have their door swing reversed at the time of order (right hinging standard).

V-SERIES™ REFRIGERATION SYSTEM

All components of the high efficiency, air-cooled, self-contained refrigeration system are mounted on top of the cabinet out of the food storage zone thereby providing greater useable storage space. Environmentally friendly R-404A freezers are metered by a capillary tube system providing a constant, safe operating temperature and quick recovery under most conditions. The temperature range on the V-SERIES™ Electronic Control is -6°F to 15°F for freezers. Each cooling coil has an anti-corrosion coating and all units feature an energy efficient hot gas condensate evaporation system.

V-SERIES™ INTERIOR STORAGE ARRANGEMENTS

Each cabinet section is provided with three (3) heavy-duty, epoxy coated shelves. The shelves are adjustablie in one inch increments. A wide door opening allows for the use of a variety of optional pan slide configurations (18" x 26" and 12" x 20").

V-SERIES™ ELECTRONIC CONTROL SYSTEM

The easy to use V-SERIES™ Control is state of the art with many exclusive features including ***SUPERCOOL* Mode, Energy Saving Mode**, multiple audible and visual alarms (minimum temperature, maximum temperature, door ajar, probe failure, clean condenser and compressor protection). Maintains three most recent alarms in memory. SUPERCOOL Mode runs the compressor constantly for a pre-determined amount of time or until a lower set-point has been reached. Energy Saving Mode activates automatically when there are no door openings for a pre-determined period of time.

CHARACTERISTICS	1 SECTION	2 SECTION	3 SECTION
DIMENSIONAL DATA			
Width, Overall (in.)	26 ½	52 ⅛	77 ¾
Depth, Overall (inc. Handles)	34 ⅞	34 ⅞	34 ⅞
Height Overall (inc. 5" Casters)	84	84	84
Depth, Door(s) Open 90° (in.)	56 ¾	56 ¾	56 ¾
Clear Door Opening, Width (in.)	21 ⅛	21 ⅛	21 ⅛
Clear Full-Door Opening, Height (in.)	55 ¼	55 ¼	55 ¼
Clear Half-Door Opening, Height (in.)	25 ⅝	25 ⅝	25 ⅝
Capacity Net (cu. ft.)	21.5	46.5	70.1
No. of Full Doors	1	2	3
No. of Half Doors	2	4	6
No. of Shelves	3	6	9
Shelf Area (sq. ft.)	17.1	36.0	54.2
ELECTRICAL DATA			
Cabinet Voltage	115/60/1	115/60/1	115/60/1
Feed Wires	2	2	3
Condensing Unit Voltage	115/60/1	115/60/1	208-230/60/1
NEMA Plug	5-15P	5-20P	NO
Total Amperes	8.5	12	12.9
REFRIGERATION DATA			
BTUH (@ 90°F AMB and -10°F EVAP)	1960	2880	3790
Condensing Unit Size (HP)	1/3 HP	1/2 HP	3/4 HP
Refrigerant	R-404a	R-404a	R-404a

NOTE: Plug style, voltage and full load amps may vary depending on certain options selected such as special voltages and compressor upgrades.

REMOTE APPLICATIONS: See form V-RRDS1 for remote refrigeration characteristics by model.

CRATED DIMENSIONS & WTS.	HT.	WIDTH	DEPTH	FT³	LBS
ONE SECTION	84 ½	36	43	75.70	325
TWO SECTION	84 ½	59 ¼	43	124.59	530
THREE SECTION	84 ½	86 ½	43	181.89	650

NOTE: In order to provide peak operating performance the cabinet must have a 2 inch all around clearance and 12 inches above the top of the condensing unit. This ensures an adequate air supply and space for routine maintenance and/or service if required.

When ordering please specify: Voltage, Hinging, Door Size, Options and Any Extended Warranty.

Copyright February 2012
Printed in USA

Delfield

6100XL

Solid Door Reach-in Freezer

Project _____
Item _____
Quantity _____
CSI Section 11400
Approved _____
Date _____

Models

• 6125XL-S	Single section full height door	• 6125XL-SH	Single section half height doors
• 6151XL-S	Two section full height doors	• 6151XL-SH	Two section half height doors
• 6176XL-S	Three section full height doors	• 6176XL-SH	Three section half height doors
• 6125XL-SR	Remote full height door	• 6125XL-SHR	Remote half height doors
• 6151XL-SR	Remote full height doors	• 6151XL-SHR	Remote half height doors
• 6176XL-SR	Remote full height doors	• 6176XL-SHR	Remote half height doors

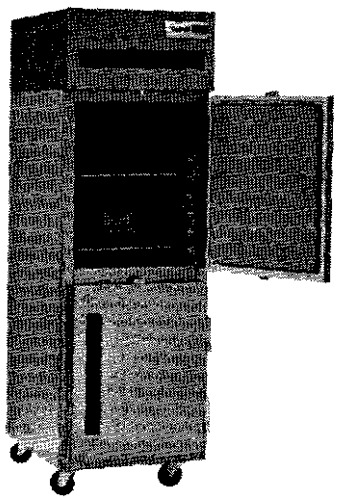

6125XL-SH

Standard Features

- Stainless steel doors and front shroud
- Aluminum sides
- Seamless, Delrite® ABS interior liner
- Top mounted refrigeration system
- High performance Delflow refrigeration, designed to maintain -5°F to 0°F
- Ships with casters mounted from factory (2&3 section units only)
- Easy to adjust epoxy shelves (three per section)
- Easy to read digital thermometer with visual high/low temp alarm
- 10' cord and plug attached
- Edgemount door hinges
- Pressure relief valve is standard to prevent door vapor lock
- High density foamed in place environmentally friendly, Kyoto Protocol Compliant, Non ODP (Ozone Depletion Potential), Non GWP (Global Warming Potential) polyurethane insulation keeps energy costs low
- Environmentally friendly R404a refrigerant
- Interior accepts 18"x 26" sheet pans on shelves or on optional tray racks
- Self closing doors with stay open feature at 120°
- Ergonomically correct, easy grip door handles
- Three year parts and labor warranty and an additional two year compressor parts warranty, limited lifetime liner warranty

Options & Accessories

- Extra shelves
- Non standard hinging
- Legs in lieu of casters
- Tray rack (TR-8B)
- Stainless steel ends/backs
- 220/60/1 voltage package*

** Inclusion of these options will alter the electrical specifications of unit*

Specifications

Exterior: Top and bottom are constructed of 24-gauge galvanized steel. Exterior sides are 0.032 aluminum. Front housing is 22-gauge stainless steel.

Doors: Unit is provided with hinged solid front door(s). Door exterior is constructed of 22-gauge stainless steel. Interior door liner is ABS. Doors are provided with locks, magnetic gaskets, self-closing, edgemount hinges; and quick grip long length door handle(s).

Interior: Liner is constructed of seamless, one piece ABS material with 15 molded shelf supports spaced 3.00" (76mm) apart. Three epoxy coated wire shelves, rated at 250 lb. load capacity each, are provided per section. Liner comes with a limited lifetime warranty.

Units are completely insulated with a minimum of 2.00" (5cm) high density foamed in place environmentally friendly, Kyoto Protocol Compliant, Non ODP (Ozone Depletion Potential), Non GWP (Global Warming Potential) polyurethane.

Interior is lighted by one 40-watt incandescent light on one and two door models, and two 40-watt incandescent lights on three door models. Lights are located outside of the food zone. Door activated switches control the lights.

Refrigeration system: All components are mounted to the exterior cabinet ceiling, outside the food zone and are assembled as one piece and can be removed as one piece. Environmentally friendly R404A refrigerant is used. System has the capability of maintaining between -5°F and 0°F in heavy use food service operations. Refrigerant is metered using a highly responsive thermostatic expansion valve. On demand, evaporator defrost is automatic using a temperature initiated/temperature terminated system with electric heaters. System is controlled using Delfield's ACT-Advanced Control Technology electronic temperature control, which provides improved pull down times, reducing compressor cycling and longer compressor life with lower energy consumption.

Evaporator condensate is eliminated using an energy efficient hot gas system. Temperature is displayed with digital display using a blue LED.

Others: Unit is supplied standard with a 10' cord and plug, attached. 4" diameter casters with an overall height of 5" are mounted on the unit from the factory on self-contained models (2&3 section units only).

Remote units are standard with legs. Legs are constructed of painted metal and are 6" high with 1" adjustability to compensate for installation location factors.

ENERGY STAR
Only Models
6125XL-S
6125XL-SH
6151XL-S
6151XL-SH

980 S. Isabella Rd.
Mt. Pleasant, Michigan 48858

Phone: 800-733-8948 or 989-773-7981
Fax: 800-669-0619

www.delfield.com

Manitowoc

6100XL: Solid Door Reach-in Freezer

Delfield

6100XL Solid Door Reach-in Freezers

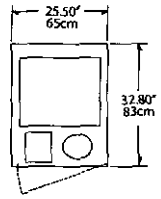

Plan View
6125XL-S

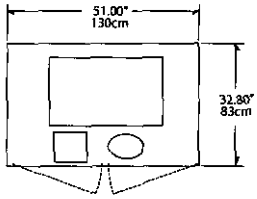

Plan View
6151XL-S

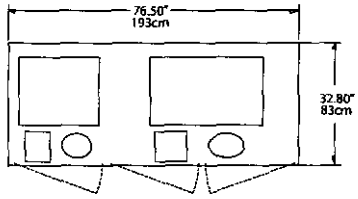

Plan View
6176XL-S

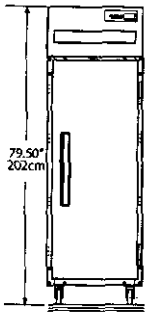

Elevation View
6125XL-S & 6125XL-SR

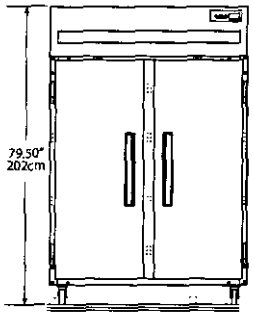

Elevation View
6151XL-S & 6151XL-SR

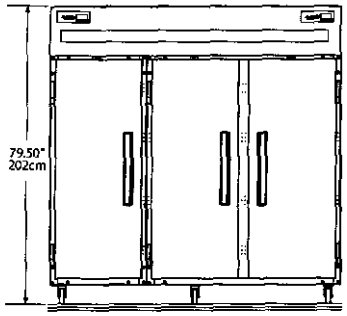

Elevation View
6176XL-S & and 6176XL-SR

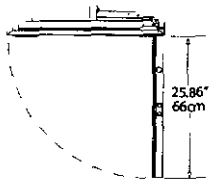

Door Clearance Detail
All Models

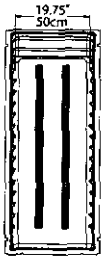

Interior Elev. View
6125XL-S & 6125XL-SR

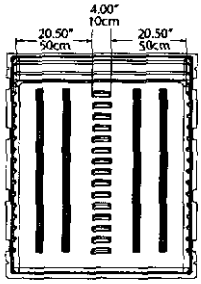

Interior Elev. View
6151XL-S & 6151XL-SR

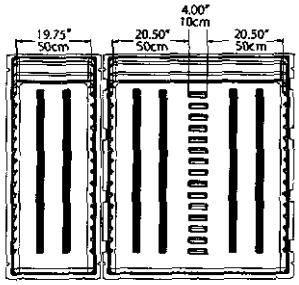

Interior Elev. View
6176XL-S & and 6176XL-SR

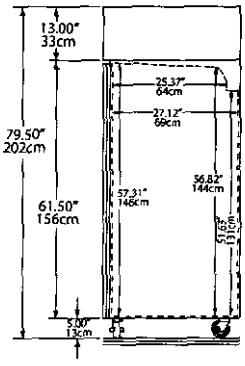

Typical End/Section View
All Models

Specifications

Model	Voltage	Amps	Volume FT³	Shelf Capacity FT²	H.P.	BTU	Ship Weight	Nema Plug	Energy (KWH/Day)
6125XL-S,	115	9.0	20.0	15.1	1/2	1516	274lbs/124kg	5-15P	6.69
6125XL-SH	115	9.0	20.0	15.1	1/2	1516	274lbs/124kg	5-15P	7.05
6151XL-S	115	12.0	43.5	33.2	3/4	1923	454lbs/206kg	5-15P	11.03
6151XL-SH	115	12.0	43.5	33.2	3/4	1923	454lbs/206kg	5-15P	12.55
6176XL-S, SH	120/208	20.0	66.5	48.3	1/2, 3/4	1516/1923	622lbs/282kg	14-20P	15.59

Remote units supplied with: Evaporator coil, solenoid valve, expansion valve, and temperature control. Condensing units to be sized and supplied by others.

Remote Model	Voltage	Amps	Volume FT³	Shelf Capacity FT²	H.P.*	BTU	Ship Weight	Nema Plug	Energy (KWH/Day)
6125XL-SR, SHR	115	2.0	20.0	15.1	1/2	1516	274lbs/124kg	5-15P	N/A
6151XL-SR, SHR	115	3.0	43.5	33.2	3/4	1923	454lbs/206kg	5-15P	N/A
6176XL-SR, SHR	115	4.0	66.5	48.3	1/2, 3/4	1516/1923	622lbs/282kg	(2)5-15P	N/A

*Recommended; will vary with refrigerant used, contact factory.

Delfield reserves the right to make changes to the design or specifications without prior notice.

980 S. Isabella Rd.
Mt. Pleasant, Michigan 48858

Phone: 800-733-8948 or 989-773-7981
Fax: 800-669-0619
www.delfield.com

Printed in the U.S.A.
DS6100XLS
03/13

Manitowoc

TRUE FOOD SERVICE EQUIPMENT, INC.
2001 East Terra Lane • O'Fallon, Missouri 63366
(636)240-2400 • Fax (636)272-2408 • (800)325-6152 • Intl Fax# (001)636-272-7546
Parts Dept. (800)424-TRUE • Parts Dept. Fax# (636)272-9471 • www.truemfg.com

Project Name: _____ AIA #
Location: _____
Item #: _____ *Qty:* _____ SIS #
Model #: _____

Model: **T-49F**

T-Series:
Reach-In Solid Swing Door -10°F Freezer

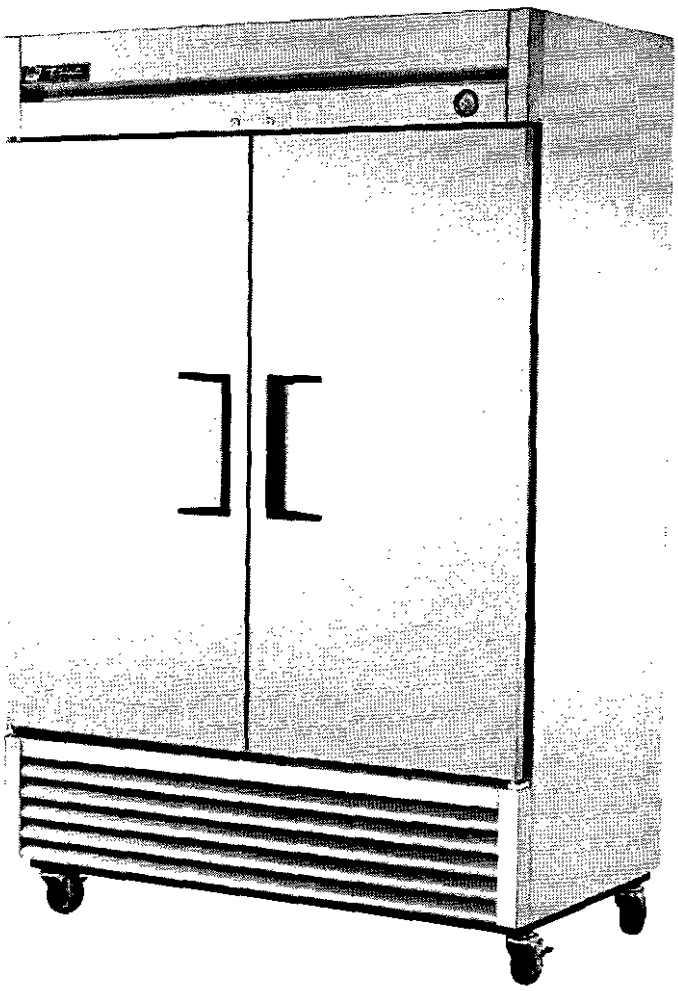

Scan code for video

T-49F

- True's solid door reach-in's are designed with enduring quality that protects your long term investment.
- Designed using the highest quality materials and components to provide the user with colder product temperatures, lower utility costs, exceptional food safety and the best value in today's food service marketplace.
- Extra large evaporator coil balanced with higher horsepower compressor and large condenser maintains -10°F (-23.3°C) cabinet temperatures. Ideally suited for both frozen foods and ice cream.
- Stainless steel solid doors and front. The very finest stainless with higher tensile strength for fewer dents and scratches.
- Adjustable, heavy duty PVC coated shelves.
- Positive seal self-closing doors. Lifetime guaranteed door hinges and torsion type closure system.
- Automatic defrost system time-initiated, temperature-terminated. Saves energy consumption and provides shortest possible defrost cycle.

Bottom mounted units feature:

- "No stoop" lower shelf.
- Storage on top of cabinet.
- Compressor performs in coolest, most grease free area of kitchen.
- Easily accessible condenser coil for cleaning.

ROUGH-IN DATA

Specifications subject to change without notice.
Chart dimensions rounded up to the nearest ⅛" (millimeters rounded up to next whole number).

Model	Doors	Shelves	Cabinet Dimensions (inches) (mm) L	D	H*	HP	Voltage	Amps	NEMA Config.	Cord Length (total ft.) (total m)	Crated Weight (lbs.) (kg)
T-49F	2	6	54⅛	29½	78⅜	¾	115/60/1	11.0	5-15P	9	480
			1375	750	1991	¾	230-240/50/1	4.8	▲	2.74	218

* Height does not include 5" (127 mm) for castors or 6" (153 mm) for optional legs.

▲Plug type varies by country.

3/13 Printed in U.S.A.

APPROVALS:

AVAILABLE AT:

Model:
T-49F

T-Series:
Reach-In Solid Swing Door -10°F Freezer

STANDARD FEATURES

DESIGN
- True's commitment to using the highest quality materials and oversized refrigeration systems provides the user with colder product temperatures, lower utility costs, exceptional food safety and the best value in today's food service marketplace.

REFRIGERATION SYSTEM
- Factory engineered, self-contained, capillary tube system using environmentally friendly (CFC free) R404A refrigerant.
- Extra large evaporator coil balanced with higher horsepower compressor and large condenser; maintains -10°F (-23.3°C). Ideally suited for both frozen foods and ice cream.
- Sealed, cast iron, self-lubricating evaporator fan motor(s) and larger fan blades give True reach-in's a more efficient low velocity, high volume airflow design. This unique design ensures faster temperature recovery and shorter run times in the busiest of food service environments.
- Bottom mounted condensing unit positioned for easy cleaning. Compressor runs in coolest and most grease free area of the kitchen. Allows for storage area on top of unit.
- Automatic defrost system time-initiated, temperature-terminated. Saves energy consumption and provides shortest possible defrost cycle.

CABINET CONSTRUCTION
- Exterior - Stainless steel front. Anodized quality aluminum ends, back and top.
- Interior - attractive, NSF approved, white aluminum liner. Stainless steel floor with coved corners.
- Insulation - entire cabinet structure and solid doors are foamed-in-place using Ecomate. A high density, polyurethane insulation that has zero ozone depletion potential (ODP) and zero global warming potential (GWP).
- Welded, heavy duty steel frame rail, black powder coated for corrosion protection.
- Frame rail fitted with 4" (102 mm) diameter stem castors - locks provided on front set.

DOORS
- Stainless steel exterior with white aluminum liner to match cabinet interior. Doors extend full width of cabinet shell. Door locks standard.
- Lifetime guaranteed recessed door handles. Each door fitted with 12" (305 mm) long recessed handle that is foamed-in-place with a sheet metal interlock to ensure permanent attachment.
- Positive seal self-closing doors. Lifetime guaranteed door hinges and torsion type closure system.
- Magnetic door gaskets of one piece construction, removable without tools for ease of cleaning.

SHELVING
- Six (6) adjustable, heavy duty PVC coated wire shelves 24 9/16"L x 22 3/4"D (624 mm x 569 mm). Four (4) chrome plated shelf clips included per shelf.
- Shelf support pilasters made of same material as cabinet interior; shelves are adjustable on ½" (13 mm) increments.

LIGHTING
- Incandescent interior lighting - safety shielded. Lights activated by rocker switch mounted above doors.

MODEL FEATURES
- Exterior temperature display.
- Evaporator is epoxy coated to eliminate the potential of corrosion.
- Rear airflow guards prevent product from blocking optimal airflow.
- NSF-7 compliant for open food product.

ELECTRICAL
- Unit completely pre-wired at factory and ready for final connection to a 115/60/1 phase, 15 amp dedicated outlet. Cord and plug set included.

115/60/1
NEMA-5-15R

OPTIONAL FEATURES/ACCESSORIES
Upcharge and lead times may apply.
- ❑ 230 - 240V / 50 Hz.
- ❑ 6" (153 mm) standard legs.
- ❑ 6" (153 mm) seismic/flanged legs.
- ❑ Alternate door hinging (factory installed).
- ❑ Novelty baskets.
- ❑ Additional shelves.
- ❑ Half door bun tray racks. Each holds up to eleven 18"L x 26"D (458 mm x 661 mm) sheet pans (sold separately) (airflow guards need to be removed).
- ❑ Full door bun tray racks. Each holds up to twenty-two 18"L x 26"D (458 mm x 661 mm) sheet pans (sold separately) (airflow guards need to be removed).
- ❑ Remote cabinets (condensing unit supplied by others; system comes standard with 404A expansion valve and requires R404A refrigerant). Consult factory technical service department for BTU information. All remote units must be hard wired during installation.

PLAN VIEW

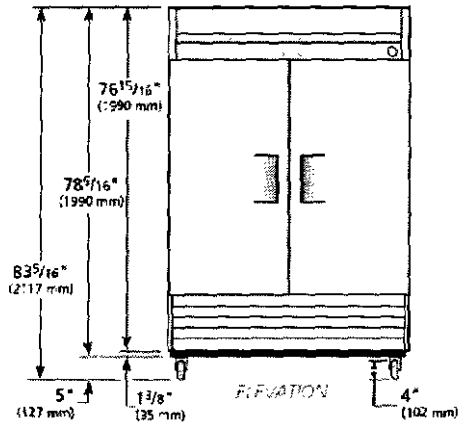

ELEVATION

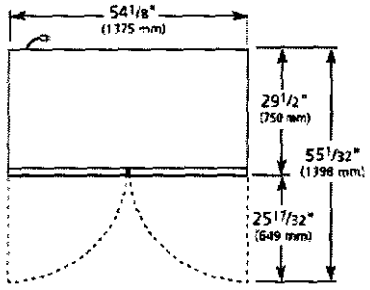

RIGHT VIEW

WARRANTY
Three year Warranty on all parts and labor and an additional 2 year warranty on compressor. (U.S.A. only)

METRIC DIMENSIONS ROUNDED UP TO THE NEAREST WHOLE MILLIMETER

SPECIFICATIONS SUBJECT TO CHANGE WITHOUT NOTICE

KCL	Model	Elevation	Right	Plan	3D	Back
	T-49F	TFGY36E	TFEY03S	TFEY02P	TFGY363	

TRUE FOOD SERVICE EQUIPMENT
2001 East Terra Lane • O'Fallon, Missouri 63366 • (636)240-2400 • Fax (636)272-2408 • (800)325-6152 • Intl. Fax# (001)636-272-7546 • www.truemfg.com

VICTORY
110 Woodcrest Road, Cherry Hill, NJ 08003-3648
856.428.4200 • 800.523.5008 • Fax: 856.428.7299
www.victoryrefrigeration.com • email: sales@victoryrefrigeration.com

PROJECT: _____
LOCATION: _____
ITEM #: _____
QUANTITY: _____

V-SERIES™

SOLID DOOR TOP MOUNT REACH-IN FREEZERS

STANDARD FEATURES

- New V-SERIES™ Electronic Control with SUPERCOOL Mode
- High Performance, Balanced, Top-Mounted Refrigeration
- Unique Magnetic Proximity Door Switch Activates Lighting
- Anti Corrosion Coated Evaporator Coil
- Stainless Steel Front and Wrap Around Sides
- Aluminum Interior and Floor
- Environmentally Safe R-404A Refrigerant
- 2.5" Min. Foamed-in-Place Polyurethane Insulation
- Self-Closing Doors with 120° Hold Open Feature
- One Piece, Snap-In Magnetic Door Gasket(s)
- Door Lock(s) Standard
- Sleek, Ergonomic, Easy Grip Horizontal Door Handle(s)
- Three (3) Epoxy Coated Wire Shelves per Section
- Accommodates 18" X 26" or 12" X 20" pans
- 6" Overall Height Casters (Set of 4)
- Cam-Lift Hinges
- Recessed Interior Incandescent Lighting
- 10' Cord and Plug (See Electrical Data for Details)

OPTIONS AND ACCESSORIES

- Change Door Swing
- Expansion Valve Technology
- Fluorescent Lighting (Standard on Glass Door Models)
- LED Lighting
- Stainless Steel Finished Back
- 6" Legs in Lieu of Casters
- 4" Overall Height Casters (Set of 4)
- Kit with Universal Pan Slides
- Kit with Rod Type Pan Slides
- Kit with Angle Type Pan Slides
- 220/50 Hz, 220/60 Hz Voltages
- Remote Models (Standard with Legs)
- Extended Warranty
- Extra Shelves

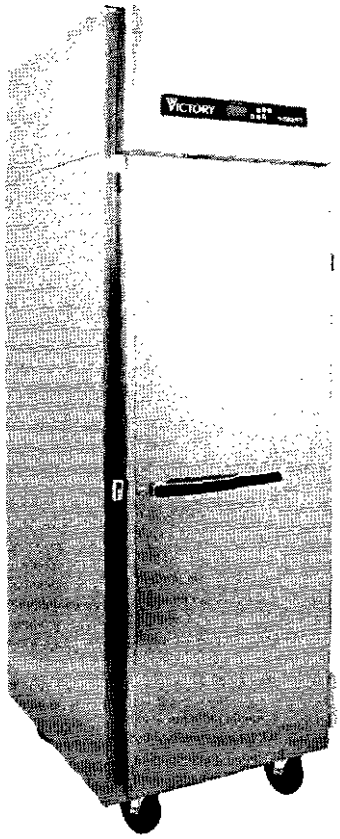

VF-SA-1D

MODELS		
	FULL-DOOR	HALF-DOOR
SOLID DOOR	VF-SA-1D* VF-SA-2D* VF-SA-3D	VF-SA-1D-HD VF-SA-2D-HD VF-SA-3D-HD

* Noted models are ENERGY STAR® listed. Please refer to www.energystar.gov to view the most up-to-date product listing and performance data.

1 Year Parts And Labor
5 Year Compressor Part Warranty

Victory Refrigeration specification sheets are available online at **www.victoryrefrigeration.com**

APPROVALS:

VICTORY

SOLID DOOR TOP MOUNT REACH-IN FREEZERS

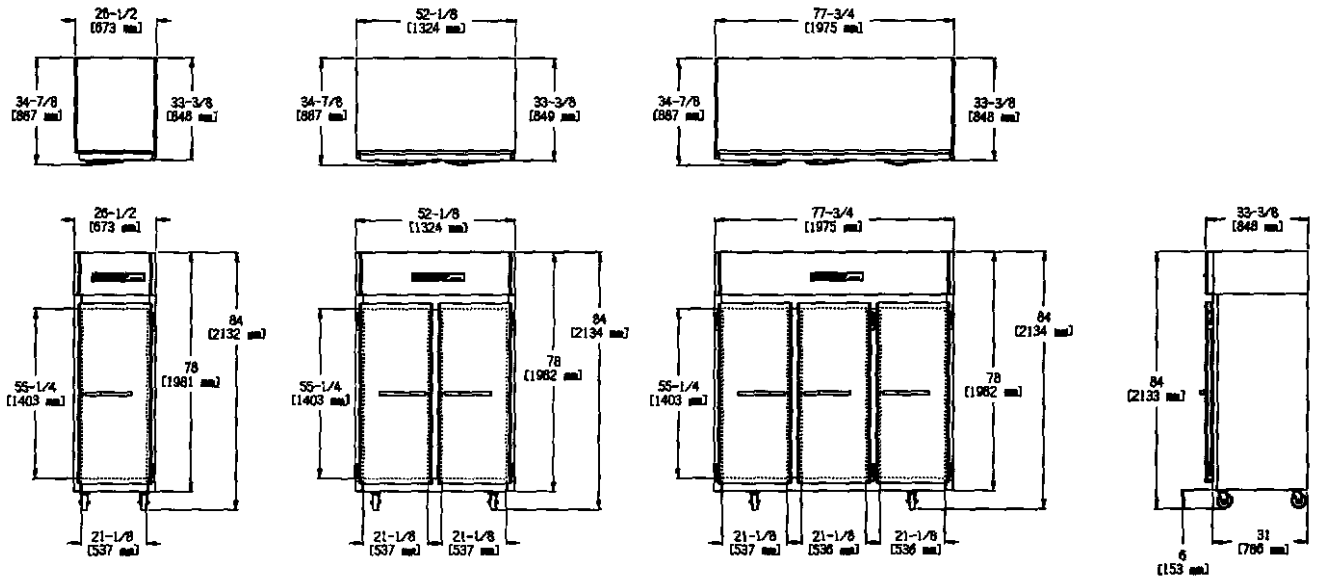

We reserve the right to change specifications and product design without notice. Such revisions do not entitle the buyer to corresponding changes, improvements, additions or replacements for previously purchased equipment.

Dimensional tolerances +/- ¼". Metric dimensions (MM)

V-SERIES™ CABINET CONSTRUCTION

The cabinet front, doors, grills and sides are constructed of polished stainless steel with the inside walls and bottom in aluminum. There is a minimum of 2.5" polyurethane foam insulation throughout (3.5" on the bottom) to ensure energy efficiency. The front grill is removable (snap-on / snap-off, no tools required) allowing easy access for cleaning the condenser. Standard lighting is recessed incandescent on solid door models.

V-SERIES™ DOOR CONSTRUCTION

The solid doors are constructed with a heavy gauge, polished stainless steel exterior and a durable ABS plastic liner. Each solid door is provided with a lock and an ergonomically correct handle. A unique magnetic proximity door switch controls the lighting on the solid door models. Cam-lift door hinges are self-closing and have a hold-open feature at 120°. Snap in place, one piece magnetic gasket(s). One section cabinets feature field reversible doors. Two and three section cabinets can have their door swing reversed at the time of order (right hinging standard).

V-SERIES™ REFRIGERATION SYSTEM

All components of the high efficiency, air-cooled, self-contained refrigeration system are mounted on top of the cabinet out of the food storage zone thereby providing greater useable storage space. Environmentally friendly R-404A freezers are metered by a capillary tube system providing a constant, safe operating temperature and quick recovery under most conditions. The temperature range on the V-SERIES™ Electronic Control is -6°F to 15°F for freezers. Each cooling coil has an anti-corrosion coating and all units feature an energy efficient hot gas condensate evaporation system.

V-SERIES™ INTERIOR STORAGE ARRANGEMENTS

Each cabinet section is provided with three (3) heavy-duty, epoxy coated shelves. The shelves are adjustable in one inch increments. A wide door opening allows for the use of a variety of optional pan slide configurations (18" x 26" and 12" x 20").

V-SERIES™ ELECTRONIC CONTROL SYSTEM

The easy to use V-SERIES™ Control is state of the art with many exclusive features including ***SUPERCOOL* Mode, Energy Saving Mode**, multiple audible and visual alarms (minimum temperature, maximum temperature, door ajar, probe failure, clean condenser and compressor protection). Maintains three most recent alarms in memory. SUPERCOOL Mode runs the compressor constantly for a pre-determined amount of time or until a lower set-point has been reached. Energy Saving Mode activates automatically when there are no door openings for a pre-determined period of time.

CHARACTERISTICS	1 SECTION	2 SECTION	3 SECTION
DIMENSIONAL DATA			
Width, Overall (in.)	26 ½	52 ⅛	77 ¾
Depth, Overall (inc. Handles)	34 ⅞	34 ⅞	34 ⅞
Height Overall (inc. 5" Casters)	84	84	84
Depth, Door(s) Open 90° (in.)	56 ¾	56 ¾	56 ¾
Clear Door Opening, Width (in.)	21 ⅛	21 ⅛	21 ⅛
Clear Full-Door Opening, Height (in.)	55 ¼	55 ¼	55 ¼
Clear Half-Door Opening, Height (in.)	25 ⅜	25 ⅜	25 ⅜
Capacity Net (cu. ft.)	21.5	46.5	70.1
No. of Full Doors	1	2	3
No. of Half Doors	2	4	6
No. of Shelves	3	6	9
Shelf Area (sq. ft.)	17.1	36.0	54.2
ELECTRICAL DATA			
Cabinet Voltage	115/60/1	115/60/1	115/60/1
Feed Wires	2	2	3
Condensing Unit Voltage	115/60/1	115/60/1	208-230/60/1
NEMA Plug	5-15P	5-20P	NO
Total Amperes	8.5	12	12.9
REFRIGERATION DATA			
BTUH (@ 90°F AMB and -10°F EVAP)	1960	2880	3790
Condensing Unit Size (HP)	1/3 HP	1/2 HP	3/4 HP
Refrigerant	R-404a	R-404a	R-404a

NOTE: Plug style, voltage and full load amps may vary depending on certain options selected such as special voltages and compressor upgrades.

REMOTE APPLICATIONS: See form V-RRDS1 for remote refrigeration characteristics by model.

CRATED DIMENSIONS & WTS.	HT.	WIDTH	DEPTH	FT³	LBS
ONE SECTION	84 ½	36	43	75.70	325
TWO SECTION	84 ½	59 ¼	43	124.59	530
THREE SECTION	84 ½	86 ½	43	181.89	650

NOTE: In order to provide peak operating performance the cabinet must have a 2 inch all around clearance and 12 inches above the top of the condensing unit. This ensures an adequate air supply and space for routine maintenance and/or service if required.

When ordering please specify: Voltage, Hinging, Door Size, Options and Any Extended Warranty.

Copyright February 2012
Printed in USA

VICTORY
110 Woodcrest Road, Cherry Hill, NJ 08003-3648
856.428.4200 • 800.523.5008 • Fax: 856.428.7299
www.victoryrefrigeration.com • email: sales@victoryrefrigeration.com

PROJECT: _____
LOCATION: _____
ITEM #: _____
QUANTITY: _____

ULTRASPEC™ SERIES

REACH-IN FREEZERS

ULTRASPEC™ V-TEMP CONTROL™

STANDARD FEATURES

- V-TEMP™ Electronic Control System
- High Performance, Balanced, Top-Mounted Refrigeration
- Environmentally Safe R-404a Refrigerant
- Energy Efficient, Dual-Speed EC Evaporator Fan Motor(s)
- Plasticized Evaporator Fin Coils
- Non-Electric Condensate Evaporator
- Foamed-in-Place Polyurethane Insulation
- Heavy Duty Cylinder Locks
- Self-Closing Doors with 120° Hold Open Feature
- Cam-Lift Hinges, Guaranteed for Life
- Ergonomically Correct Door Handles, Guaranteed for Life
- S, SA Series have 6" High, Adjustable Stainless Steel Legs
- A Series has four 6" High Standard Black Legs
- Hinged Front Shroud Makes Condenser Cleaning Easier
- Proximity Door Switch Activates Interior Lighting
- One Piece, Snap-In Magnetic Door Gasket(s)
- Anti-Condensate Door Perimeter Heaters
- Stainless Steel Interior Door Liner
- Energy Saving Thermal Breaker Caps, Guaranteed for Life
- Three (3) Epoxy Coated Wire Shelves per Cabinet Section
- Cord and Plug (see electrical data for details)

OPTIONS AND ACCESSORIES

- Full and Half-Size Glass Doors
- Change Door Swing
- Remote Models
- Correctional Facilities Options
- Stainless Steel Case Back and Shroud
- Fluorescent Lighting
- LED Lighting
- Stainless Steel Shelves
- 6" Overall Height Casters (Set of 4)
- Exterior Laminate Décor
- Adjustable Tray and Pan Slides
- Optional Voltages
- USB Data Recorder
- RS-485 Serial Interface
- Two (2) Year Service Warranty

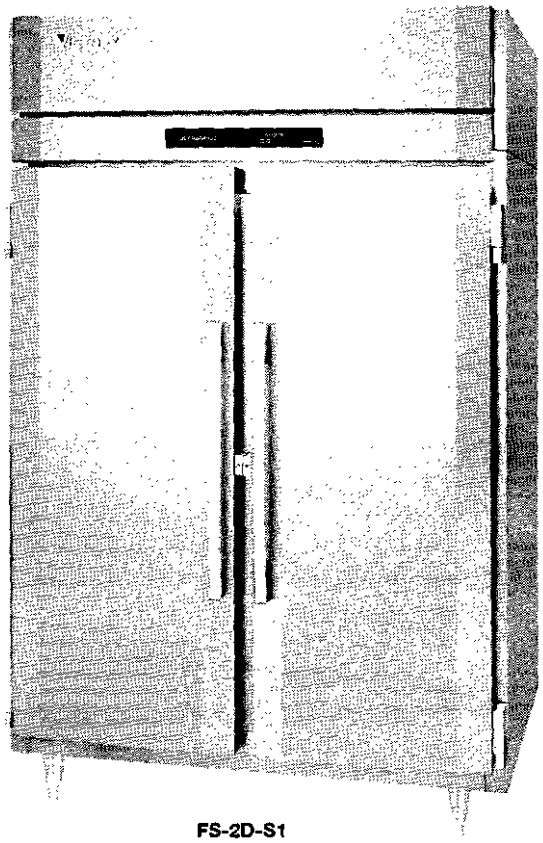

FS-2D-S1

MODELS

	LONG-DOOR	HALF-DOOR
S SERIES Stainless Steel Exterior and Interior	FS-1D-S1*	FS-1D-S1-HD
	FS-2D-S1*	FS-2D-S1-HD
	FS-3D-S1*	FS-3D-S1-HD
SA SERIES Stainless Steel Exterior and Aluminum Interior	FSA-1D-S1*	FSA-1D-S1-HD
	FSA-2D-S1*	FSA-2D-S1-HD
	FSA-3D-S1*	FSA-3D-S1-HD
A SERIES Stainless Steel Front and Doors, Aluminum Ends and Interior	FA-1D-S1*	FA-1D-S1-HD
	FA-2D-S1*	FA-2D-S1-HD
	FA-3D-S1*	FA-3D-S1-HD

NOTE: Not all marks refer to all models

* Noted models are ENERGY STAR® listed. Please refer to www.energystar.gov to view the most up-to-date product listing and performance data.

1 Year Parts and Labor Warranty • 5 Year Compressor Warranty
2 Year V-TEMP™ Control Warranty

Victory Refrigeration specification sheets are available online at **www.victoryrefrigeration.com**

APPROVALS:

VICTORY — **REACH-IN FREEZERS**

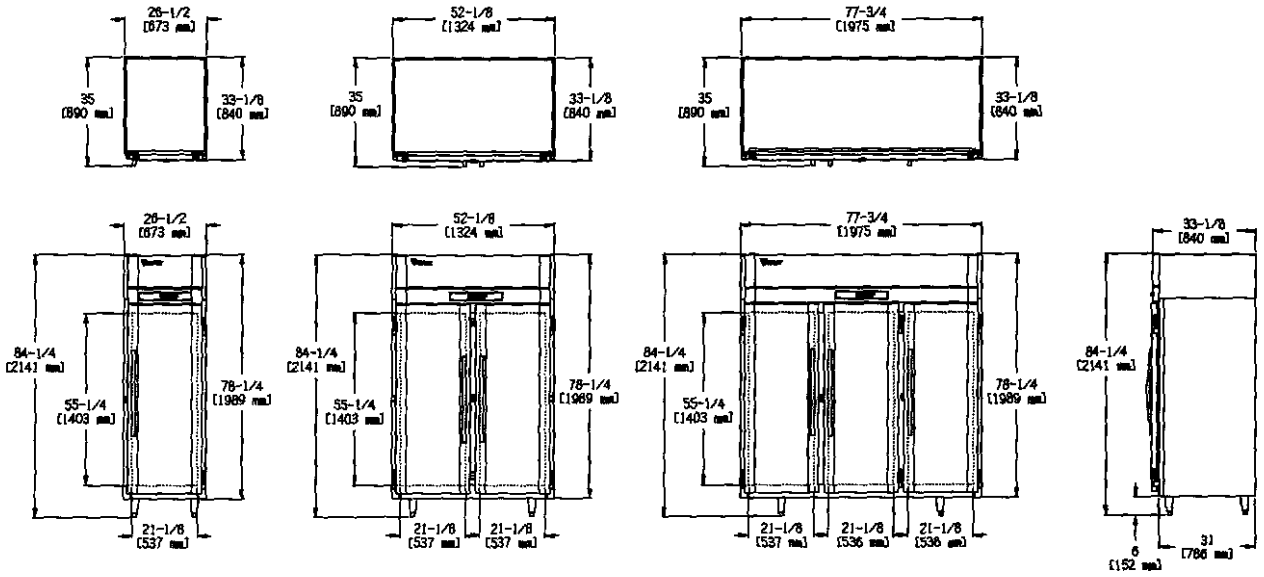

We reserve the right to change specifications and product design without notice. Such revisions do not entitle the buyer to corresponding changes, improvements, additions or replacements for previously purchased equipment.

Dimensional tolerances +/- 1/4". Metric dimensions (MM)

CABINET CONSTRUCTION
The cabinet front and doors are constructed of heavy gauge, polished stainless steel to maintain an attractive appearance after years of heavy use. Polyurethane foam insulation throughout ensures the ultimate in energy efficiency. The front shroud lifts up to provide easy access when cleaning the condenser unit.

DOOR CONSTRUCTION
The doors are heavy gauge, polished stainless steel with a stainless steel interior liner. Each door is provided with a cylinder lock and ergonomically correct vertical handle. The door hinges are self-closing and have a hold-open feature at 120° which facilitates product loading. Proximity switches energize the recessed interior incandescent lighting when the door is opened. Humidity control wires around the door jamb prevent condensation from forming on the front of the cabinet in high humidity environments. The wires are concealed by a high impact, non-conducting thermal breaker cap.

REFRIGERATION SYSTEM
All components of the high efficiency, air-cooled, self-contained refrigeration system are mounted on top of the cabinet out of the food storage zone providing greater usable storage space. Environmentally friendly R-404a refrigerant is efficiently metered by a capillary system providing a constant, safe operating temperature and quick "recovery" under the most demanding conditions. The hermetically sealed systems are designed to operate at 0°F. Each cooling coil has plasticized fin coils to resist food acids and dual-speed EC fan motor(s) for greater cooling capacity and efficiency. All condensate water is disposed of automatically by the energy efficient, non-electric condensate evaporator.

INTERIOR STORAGE ARRANGEMENTS
Each cabinet section is provided with three heavy-duty, epoxy coated wire shelves. The shelves are adjustable in one inch increments. A wide door opening allows for the use of a variety of optional pan slide configurations including 18" x 26" and 12" x 20" pans.

V-TEMP™ CONTROL SYSTEM
The easy to use V-Temp™ Control is provided standard with a two year parts and labor warranty. This durable, water resistant microprocessor monitors and controls the entire temperature maintenance process. It includes an ON/OFF switch, manual defrost, interior light switch, LED temperature indicator in °C or °F, a HI/LO audio/visual temperature alarm, power supply interruption, door ajar and "clean condenser" alarms. A manager's "lock-out" feature is provided to safeguard pre-determined control settings. A HAACP Event Indicator/Memory feature announces and records up to nine (9) alarm events. Unique to the V-Temp are two standard modes of operation:

- SUPERCOOL - Provides a lower "set-point" refrigeration condition for a set period of time when food has just been loaded into the freezer and needs to be quickly brought back down to a safe temperature.
- ENERGY SAVER - The cabinet automatically reverts to the energy saving mode when there are no door openings for four hours.

CHARACTERISTICS	1 SECTION	2 SECTION	3 SECTION
DIMENSIONAL DATA			
Capacity Net (cubic ft.)	21.5	46.5	70.1
Width, Overall (in.)	26 ½	52 ⅛	77 ¾
Depth, Overall (inc. handles)	35	35	35
Depth, Door(s) open 90' (in.)	56 ¾	56 ¾	56 ¾
Clear Door Width (in.)	21 ⅛	21 ⅛	21 ⅛
Clear Half-Door Height (in.)	25 ⅜	25 ⅜	25 ⅜
Clear Full-Door Height (in.)	55 ¼	55 ¼	55 ¼
Height Overall (inc. 6" legs)	84 ¼	84 ¼	84 ¼
No. Full/Half Doors	1F, 2H	2F, 4H	3F, 6H
No. of Shelves	3	6	9
Shelf Area (square ft.)	15.4	33.2	50.1
ELECTRICAL DATA			
Cabinet Voltage	115/60/1	115/60/1	115/60/1
Feed Wires	2	2	2
Condensing Unit Voltage	115/60/1	115/60/1	208-230/60/1
NEMA Plug	5-15P	5-20P	NO
Total Amperes	8.5	12	12.9
REFRIGERATION DATA			
Condensing Unit Size	1/3 HP	1/2 HP	3/4 HP
Refrigerant	R-404a	R-404a	R-404a

NOTE: Plug style, voltage and full load amps may vary depending on certain options selected such as glass doors, fluorescent lighting and compressor upgrades.

REMOTE APPLICATIONS
See form V-RRDS1 for remote refrigeration characteristics by model

CRATED DIMENSIONS & WTS.	HT.	WIDTH	DEPTH	CU. FT.	LBS
ONE SECTION	84 ½	36	43	75.70	320
TWO SECTION	84 ½	59 ¼	43	124.59	520
THREE SECTION	84 ½	86 ½	43	181.89	645

NOTE: In order to provide peak operating performance the cabinet must have a 2 inch all around clearance and 12 inches above the top of the condensing unit. This ensures an adequate air supply and space for routine maintenance and/or service if required.

Copyright February 2012
Printed in USA

VICTORY
110 Woodcrest Road, Cherry Hill, NJ 08003-3648
856.428.4200 • 800.523.5008 • Fax: 856.428.7299
www.victoryrefrigeration.com • email: sales@victoryrefrigeration.com

PROJECT: _____
LOCATION: _____
ITEM #: _____
QUANTITY: _____

ULTRASPEC™ SERIES

ROLL-IN WARMING CABINETS

ULTRASPEC V-TEMP CONTROL™

STANDARD FEATURES

- V-TEMP™ Electronic Control System
- Adjustable Electronic Temp Control from 80°F to 180°F
- Built-in, Adjustable Humidity Control Vent
- Safety Shielded Strip Type Heating Elements
- Externally Mounted Blower Maintains Even Temperatures
- Stainless Steel Doorjamb(s)
- Foamed-in-Place Polyurethane Insulation
- Heavy Duty Cylinder Locks
- Self-Closing Doors with 120° Hold Open Feature
- Cam-Lift Hinges, Guaranteed for Life
- Ergonomically Correct Door Handles, Guaranteed for Life
- Adjustable Door Wiper Gasket(s)
- Stainless Steel Floor
- Proximity Door Switch Activates Interior Lighting
- One Piece, Snap-In Magnetic Door Gasket(s)
- Stainless Steel Interior Door Liner
- Removable Ramp(s)
- Accepts Mobile Storage Racks up to 27" W x 29" D x 64.5" H

OPTIONS AND ACCESSORIES

- Full Size Hinged Glass Doors
- Chnage Door Swing
- Correctional Facilities Options
- Stainless Steel Case Back and Shroud
- Stainless Steel Wire Shelves
- Shelf Pilaster Strips
- Exterior Laminate Décor
- Optional Voltages (single section only)
- Cord and Plug
- Two (2) Year Service Warranty

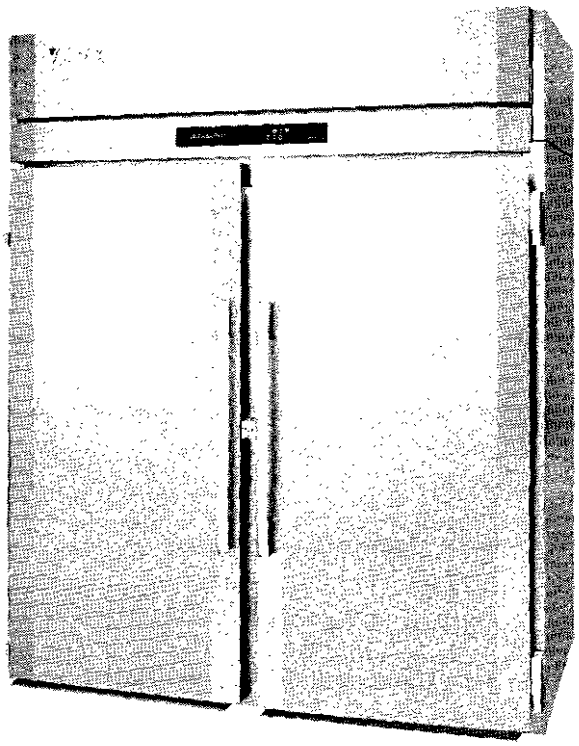

HIS-2D-1

MODELS	
	LONG-DOOR
S SERIES Stainless Steel Exterior and Interior	HIS-1D-1 HIS-2D-1
SA SERIES Stainless Steel Exterior and Aluminum Interior	HISA-1D-1 HISA-2D-1
A SERIES Stainless Steel Front and Doors, Aluminum Ends and Interior	HIA-1D-1 HIA-2D-1

NOTE: Not all marks refer to all models

1 Year Parts and Labor Warranty • 2 Year V-TEMP™ Control Warranty

Victory Refrigeration specification sheets are available online at **www.victoryrefrigeration.com**

APPROVALS:

VICTORY — ROLL-IN WARMING CABINETS

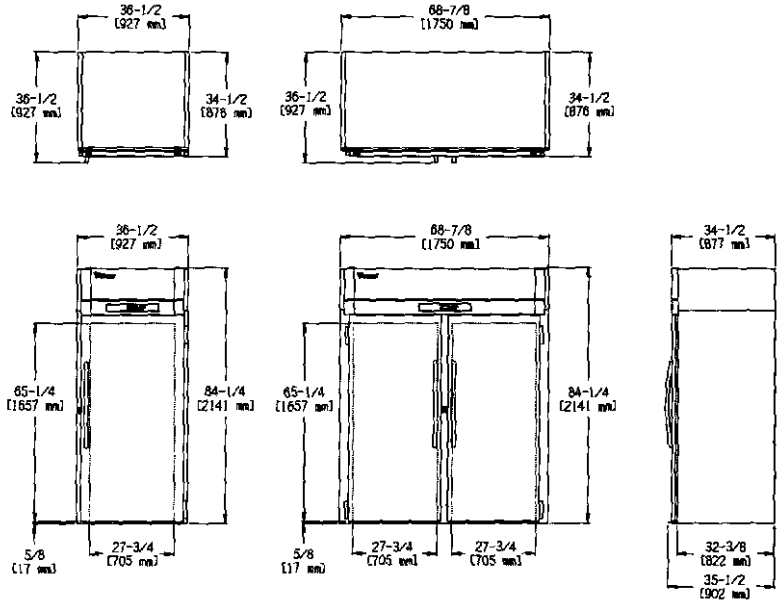

We reserve the right to change specifications and product design without notice. Such revisions do not entitle the buyer to corresponding changes, improvements, additions or replacements for previously purchased equipment.

Dimensional tolerances +/- ¼". Metric dimensions (MM)

CABINET CONSTRUCTION
The cabinet front and doors are constructed of heavy gauge, polished stainless steel to maintain an attractive appearance after years of heavy use. Polyurethane foam insulation throughout ensures the ultimate in energy efficiency.

DOOR CONSTRUCTION
The doors are heavy gauge, polished stainless steel with a stainless steel interior liner. Each door is provided with a cylinder lock and ergonomically correct vertical handle. The door hinges are self-closing and have a hold-open feature at 120° which facilitates product loading. Proximity switches energize the recessed interior incandescent lighting when the door is opened.

HEATING SYSTEM
The safety shielded, "strip type" heaters located at the bottom of the cabinet interior are precisely controlled by the V-TEMP™ electronic control with a temperature range from 80°F to 180°F. An externally mounted blower system ensures even temperatures throughout the cabinet interior. A built-in, adjustable humidity control vent allows the operator to maintain a moist or more dry environment.

INTERIOR STORAGE ARRANGEMENTS
Each door opening accepts a mobile storage rack measuring up to 27" W x 29" D x 64.5" H. Optional shelf pilasters and wire shelves are available.

V-TEMP™ CONTROL SYSTEM
The easy to use V-TEMP™ Control is provided standard with a two year parts and labor warranty. This durable, water resistant microprocessor monitors and controls the entire temperature maintenance process. It includes an ON/OFF switch located on the control face, interior light switch, LED temperature indicator in °C or° F, a HI/LO audio/visual temperature alarm , and a door ajar alarm. The control has a set point memory. Upon start up, the unit will warm up to the last temperature set point. A manager's "lock-out" feature is provided to safeguard pre-determined control settings.

CHARACTERISTICS	1 SECTION	2 SECTION
DIMENSIONAL DATA		
Capacity Net (cubic ft.)	33.6	67.2
Width, Overall (in.)	36 ½	68 ⅞
Depth, Overall (inc. handles)	36 ½	36 ½
Depth, Door(s) Open 90° (in.)	65 ¼	65 ¼
Clear Door Width (in.)	27 ¾	27 ¾
Clear Full-Door Height (in.)	65 ¼	65 ¼
Height Overall	84 ¼	84 ¼
No. Full Doors	1F	2F
ELECTRICAL DATA		
Cabinet Voltage	208-240/60/1	208-240/60/1
Heater Watts per Section (@240V)	1500	1500
Total Wattage (Heaters & Fan @ 240V)	1500	3000
Feed Wires	2	2
NEMA Plug	NO	NO
Total Amperes	6.3	13.0

NOTE: Plug style, voltage and full load amps may vary depending on options selected such as optional voltages.

CRATED DIMENSIONS & WTS.	HT.	WIDTH	DEPTH	FT³	LBS
ONE SECTION	88 ¼	42	43	92.23	325
TWO SECTION	88 ¼	74	43	162.51	540

Copyright February 2012
Printed in USA

CARTER-HOFFMANN

PH1410, PH1420 & PH1430
HEAVY-DUTY HEATED TRANSPORT CARTS
(bottom mounted heating system)
Correctional for Compartment Trays

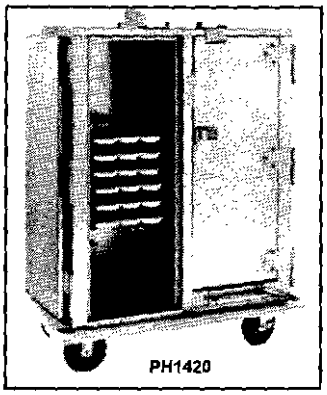
PH1420

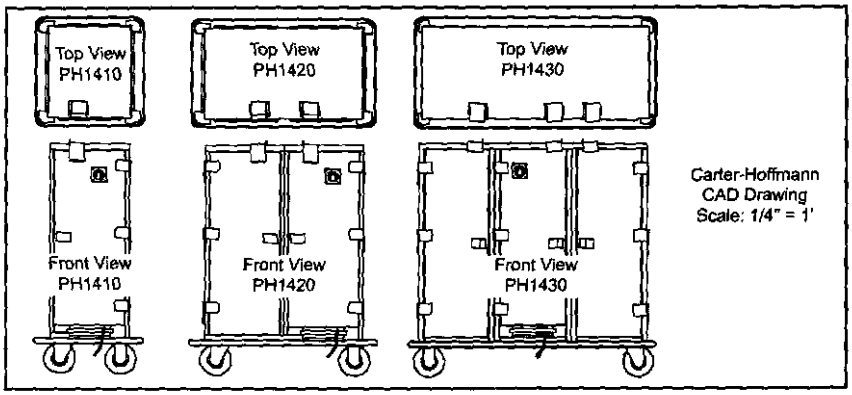

Model Number	TrayCapacity* 10"x14"	TrayCapacity* 14"x18" or 12"x20"	Slide Pairs Standard	Inside Working Height in	Inside Working Height mm	Overall Dimensions Height in	Overall Dimensions Height mm	Overall Dimensions Depth in	Overall Dimensions Depth mm	Overall Dimensions Width in	Overall Dimensions Width mm	Caster Diameter in	Caster Diameter mm	Shipping Weight lbs	Shipping Weight kgs
☐ PH1410	30	15	15	49	1245	61 7/8	1572	29 1/2	749	30 5/8	778	8	203	220	98
☐ PH1420	60	30	30	49	1245	61 7/8	1572	29 1/2	749	50 1/2	1283	8	203	479	217
☐ PH1430	90	45	45	49	1245	61 7/8	1572	29 1/2	749	70 3/8	1788	8	203	759	344

* Tray slides fixed on 3" centers. TRAY SAMPLE REQUIRED WITH ORDER.

CONSTRUCTION...Completely welded cabinet construction and top corners, with outer cabinet formed to base and welded. All seams turned in to eliminate raw edges. Exposed fasteners are tamper-resistant.

CABINET MATERIAL...All stainless steel construction; 16 gauge polished exterior and 20 gauge interior.

BASE FRAME...12 gauge stainless steel full depth bolsters with 1"x1" 16 gauge stainless steel perimeter tube supports welded to bolsters.

CASTERS...8" diameter, industrial grade caster with polyurethane tread. Sealed roller bearing and double ball bearing swivel. Zerk grease fittings. Plated mounted and bolted to base in offset wheel-ahead pattern. All swivel on PH140; two swivel & two rigid on PH1420 & PH1430. Two casters fitted with brakes.

BUMPER... Non-marking gray vinyl bumper set in heavy-duty 3/16" thick extruded aluminum frame with reinforced corner cutouts. Reinforced with 12 gauge angle brackets welded to cart and bolted through bumper.

INSULATION...High density fiberglass, full 1" thick continuous wrap-around type fiberglass insulation in sides, bottom, top and doors.

DOORS...Non-removable, flush mounted design. Welded double panel stainless steel; 16 gauge polished exterior and 20 gauge interior. Filled with 1" thick high density fiberglass insulation. 270 degree door swing (except center door on PH1430).

HINGES...12 gauge stainless steel butt style hinges with 3/8" diameter stainless steel rod pins, fully welded and bolted to cabinet and doors.

LATCHES...Flush mounted heavy-duty slide latch for positive door closure. Flip-down transport latch(es) with padlock hasp.

HANDLES... Two 1" diameter stainless steel tubular handles, recessed in cabinet.

TRAY RACK ASSEMBLIES... 18 gauge stainless steel tray racks with welded stainless steel angle slides, secured in place with tamper-resistant hold down device. Standard spacing at 3". Removable with tools.

THERMOMETER...Dial type with remote sensing bulb and protective cover.

HEATING SYSTEM...Bottom mounted heater secured in place with hold-down strap and tamper-resistant fasteners. Entire unit removable with tools. Inconel-sheathed heating element. High impedence protected, internally cooled fan motor. Full range thermostat concealed for tamper resistance. Power indicating light.

ELECTRICAL CHARACTERISTICS... PH1410 & PH1420 operate on 120 volts, 60 cycle, single phase 1600 watts, 13.7 amps. PH1430 operates on 120 volts, 50/60 cycle, single phase, 2200 watts, 18.3 amps. Ten foot 3 wire rubber cord with 3 prong grounding plug. NEMA 5-15P on PH1410 & PH1420; NEMA 5-20P on PH1430.

PERFORMANCE...Capable of heating to 200° F (94° C). Preheat to 160° F (71° C) in approximately 25 minutes.

ACCESSORIES/OPTIONS...
- ☐ Locking Door Latch
- ☐ Alternate Caster Sizes and Types
- ☐ Menu Card Holder
- ☐ Alternate Electrical Configurations

Specifications subject to change through product improvement & innovation.

CARTER-HOFFMANN
1551 McCormick Ave., Mundelein, IL 60060
(847) 362-5500 • (800) 323-9793 • Fax (847) 367-8981
www.carter-hoffmann.com

NSF/ANSI 4

Printed in U.S.A. G30 0114

Carter-Hoffmann is a trademark of Carter-Hoffmann LLC

PH1410, PH1420 & PH1430
HEAVY-DUTY HEATED TRANSPORT CARTS
Since 1947, foodservice equipment that delivers!

FEATURES & BENEFITS

COMPLETELY WELDED TURNED-IN SEAM CONSTRUCTION... Adds rigidity to entire cabinet and eliminates raw edges for easy cleaning and safety.

FLUSH MOUNTED SLIDING DOOR LATCH... Exclusively designed for transport applications. Door remains closed during transport. Flush design protects latch from damage.

HEAVY-DUTY CASTERS WITH SEALED ROLLER BEARING... Long lasting, easy rolling for maximum load and minimum maintenance.

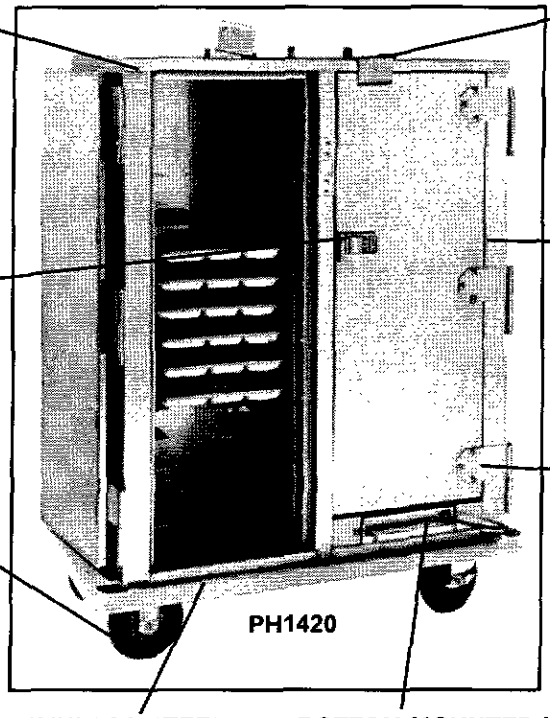
PH1420

TOP-MOUNTED TRANSPORT LATCHES... Heavy duty 12 gauge stainless steel with padlock hasp for maximum security. One latch per door.

RECESSED DOOR... Flush mounted design protects door and hinges from damage during transport.

HEAVY-DUTY HINGES... Stainless steel hinges welded and bolted to cabinet for durable long life. 270 degree door swing protects door from damage.

HEAVY-DUTY STAINLESS STEEL BASE FRAME...
12 gauge caster bosters with tubular perimeter frame to withstand heavy loads and harsh transport conditions.

BOTTOM MOUNTED HEATER... Blower heating system for fast heat up, recovery and even heat distribution throughout cabinet. Removable with tools for maintenance and cleaning.

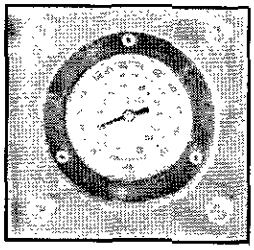

THERMOMETER WITH LEXAN COVER... Allows convenient and accurate temperature monitoring while discouraging tampering. Mounted with tamper-resistant fasteners.

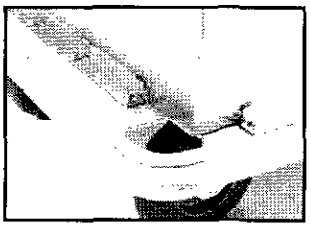

HEAVY-DUTY NON-MARKING BUMPER SET IN 3/16" THICK EXTRUDED ALUMINUM FRAME WITH STAINLESS STEEL REINFORCEMENTS... Stands up to severe use and protects doorways, walls and cart from damage.

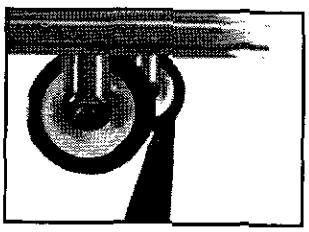

OFFSET "WHEEL AHEAD" PATTERN... Only one wheel can pass over uneven surfaces at a time for easy handling and steering.

NSF/ANSI 4

1551 McCormick Avenue, Mundelein, Illinois 60060 Tel. (847)362-5500 • (800)323-9793 • Fax (847)367-8981 www.carter-hoffmann.com

Servend

S-150 • S-200 • S-250 Ice Dispensers

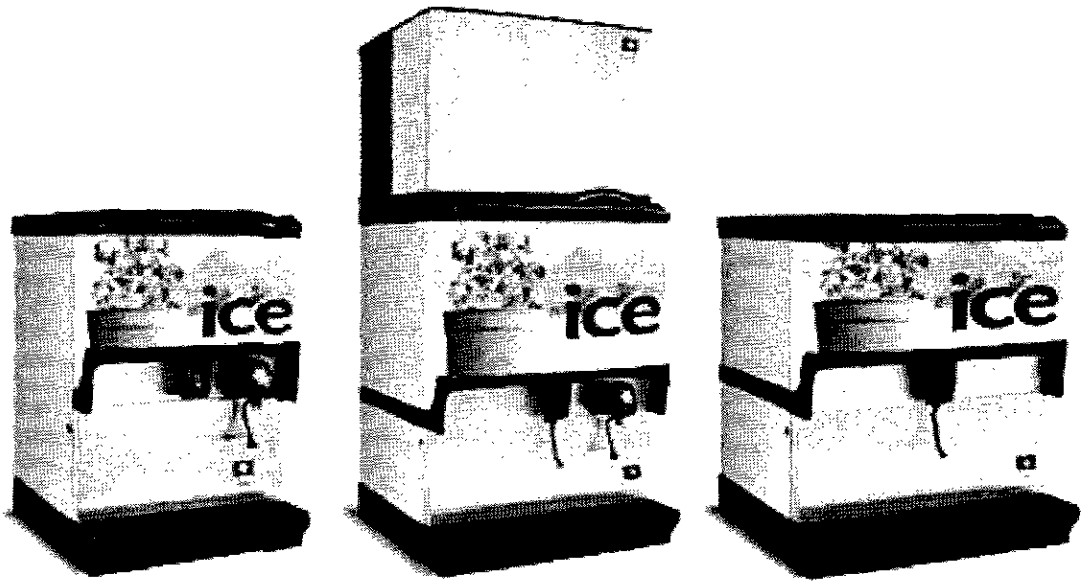

S-150 with water valve | S-250 with water valve | S-200

Servend's S-Series ice dispensers feature a no-hassle one-piece structural base, strengthened drive train, and modular design, all resulting in a more durable ice dispenser.

Standard Features

- Servend's patented paddle wheel ice dispense technology maximizes counter space.
- Use with Multiplex remote refrigeration unit with optional beverage valves.
- One-piece ABS base provides a solid foundation as well as adding structural rigidity to the dispenser.
- Enhanced agitation and drive system provides consistent ice dispense and ease of serviceability.
- Patented Rocking Chute™ simplifies ice dispensing and storage.
- Surround View™ merchandiser with attractive "ice" graphics draws customer attention.

ISO 9001:2000 Quality System Certified

2100 Future Drive
Sellersburg, IN 47172 USA

Tel: 812.246.7000
Fax: 812.246.7024

www.manitowocbeverage.com/us

Manitowoc

S-150 • S-200 • S-250 Ice Dispensers

Servend

S-150 • S-200 • S-250 Ice Dispensers

Specifications

	S-150	S-200	S-250
Standard Features	Lighted merchandiser, ice graphics, leg kit, and drain kit.		
Approx. Shipping Weights	185.12 lbs. / 69.09 kgs.	235 lbs. / 107 kgs.	260 lbs. / 152 kgs.
Countertop Weight (w/o ice)	133.12 lbs. / 60.38 kgs.	184 lbs. / 69 kgs.	204 lbs. / 118 kgs.
Ice Storage Capacity	Up to 150 lbs. / 68 kgs.	Up to 200 lbs. / 91 kgs.	Up to 250 lbs. / 114 kgs.
Electrical Requirements	Dispenser: 120V/60Hz/2.8FLA. 220V/50Hz/1 also available.		
Drain	Single 0.75" (1.91 cm) PVC (N.P.T.) drain fitting extends from drain pan Units can be drained from the bottom or back of unit.		
Ice Machine Compatibility	Manual fill or top-mount with compatible ice machines. Contact MBE for adapter kit requirements for top-mounted ice machine applications.		
Options	Flomatic water valve. Side splash panels. Flomatic 424 and 464 beverage valves, available in sanitary lever, push button, portion control and autofill valve. Other valves available, contact factory for details.		

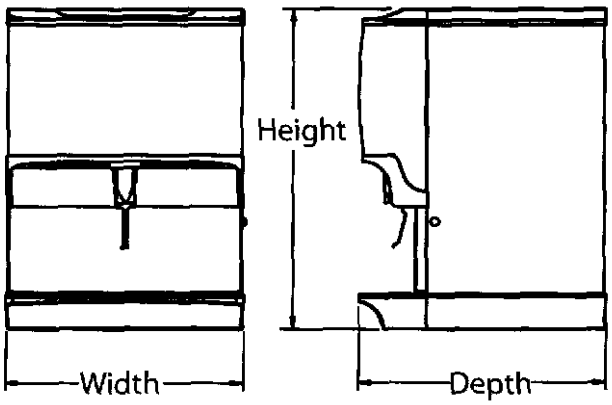

	S-150	S-200	S-250
Width	23.00"	30.00"	30.00"
	58.42 cm	76.20 cm	76.20 cm
Depth	31.13"	31.13"	31.13"
	79.07 cm	79.07 cm	79.07 cm
Height*	34.88"	34.88"	40.88"
	88.60 cm	88.60 cm	103.8 cm

**Height dimension without full lid. Add .50" (1.27 cm) for full lid.*

37698 ©2010 Servend 3/10 Continuing product improvement may necessitate change of specifications without notice.

2100 Future Drive
Sellersburg, IN 47172 USA

Tel: 812.246.7000
Fax: 812.246.7024
www.manitowocbeverage.com/us

Mixed Sources
FSC
Manitowoc

Scotsman
Ice Systems

PRODIGY

N0622 – 600 lb Nugget Ice Machine

Prodigy® Nugget Ice Machine

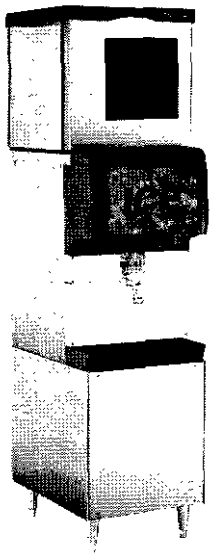

Shown on ID150 dispenser.

Features

Scotsman Nugget Ice™ was created with the consumer in mind. [illegible]

Prodigy Nugget Ice Machines are [illegible] using up to 50% less water and 15 [illegible] energy than cube ice machines.

Autoalert [illegible] constantly communicate about operating status and actually signal your staff when it's time to descale, sanitize and more - making upkeep practically foolproof.

[illegible] than ever with easily-removed panels allowing clear access to internal components and a diagnostic code display insuring the right fix the first time. Reusable air filter is easily removable from the outside.

An optional [illegible] provides NAFEM data protocol and additional operational data that can be displayed on-screen or transmitted remotely, resulting in early alert and fast diagnosis of operating issues.

An optional [illegible] sensor allows you the flexibility to program ice levels, for up to 7 days, keeping just the right amount of freshly made ice in the bin.

[illegible] 3 year parts and labor warranty.

24 Hour Volume Production

Air Cooled			Remote Cooled			Water Cooled		
70°F/21°C 50°F/10°C lb/kg	Air Water	90°F/32°C 70°F/21°C lb/kg	70°F/21°C 50°F/10°C lb/kg	Air Water	90°F/32°C 70°F/21°C lb/kg	70°F/21°C 50°F/10°C lb/kg	Air Water	90°F/32°C 70°F/21°C lb/kg
643/292		500/227	660/299		530/240	715/325		570/259

c UL us NSF

NAFEM DATA PROTOCOL

CERTIFIED ISO 9001:2008

agion Nature's antimicrobial

Modular Bin & Dispenser Options

Model Number	Dimensions W" x D" x H"	Application Capacity lb/kg	AHRI Certified Bin Capacity lb/kg	Finish	Ship Weight lb/kg
B322S	22 x 34 x 44**	370/168	290/132	SS	140/64
B530P*	30 x 34 x 44**	536/244	420/191	Poly	150/68
B530S*	30 x 34 x 44**	536/244	420/191	SS	110/50
ID150*	22 x 30 x 35.625	150/68		SS	150/68
ID200*	30 x 30 x 35.625	200/91		SS	195/89
ID250*	30 x 30 x 39.625	250/114		SS	200/91

*Contact Scotsman for bin top requirements. **Add 6" H for bin legs

Bin: B530S

Dispenser: ID200

Nugget Ice

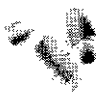

The Original Chewable Ice™! Soft ice ideal for fountain beverages and blended drinks.

Warranty

- 3 years parts and labor on all components.
- 5 years parts on the compressor.

Warranty valid in North, South & Central America.
Contact factory for warranty in other regions.

Scotsman Ice Systems · 775 Corporate Woods Parkway · Vernon Hills, IL 60061
1-800-SCOTSMAN
Fax: 847-913-9844
E-mail: customer.relations@scotsman-ice.com

N0622 – 600 lb Nugget Ice Machine

Scotsman
Ice Systems

Revit drawings available at www.scotsman-ice.com

REVIT By Scotsman

N0622 - 600 lb Nugget Ice Machine

* Installation Note: Allow 6" minimum space at back for utility connections.

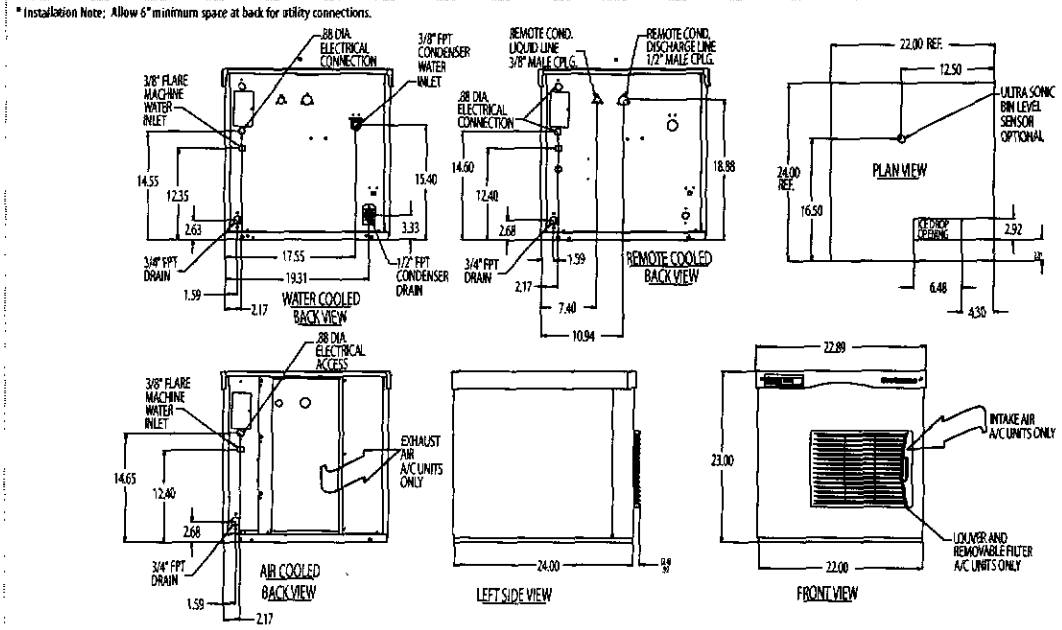

Specifications

Model Number	Condenser Unit	Basic Electrical Volts/Hz/Phase	Max. Fuse Size or HACR Circuit Breaker (amps)	Circuit Wires	Min. Circuit Ampacity	Energy Consumption kWh/100 lb (45.4 kg) 90°F(32°C)/70°F(21°C)	Water Usage Gallons/100 lb (liters/45.4 kg) Potable 90°F(32°C)/ 70°F(21°C)	Water Usage Gallons/100 lb (liters/45.4 kg) Condenser 90°F(32°C)/ 70°F(21°C)
N0622A-1	Air	115/60/1	25	2	18.3	5.3	12.0/45.5	-
N0622R-1	Remote	115/60/1	25	2	19.4	5.6	12.0/45.5	-
N0622W-1	Water	115/60/1	25	2	16.7	4.4	12.0/45.5	102/386.7
N0622A-32	Air	208-230/60/1	15	2	9.8	5.3	12.0/45.5	-

All Models

Dimensions (W x D x H):
Unit:
22.9" x 24" x 23"
(58.2 x 61.0 x 58.4 cm)
Shipping Carton:
25.5" x 27.5" x 28.5"
(64.8 x 69.9 x 72.4 cm)
Shipping Weight:
172 lb/78 kg
BTU per hour:
7,100
Refrigerant:
R-404A

Accessories

Model Number	Description
KVS	Vari-Smart™ Ice Level Control - Program ice bin levels to match ice needs.
KSBU	Smart-Board™ Advanced Control - Use additional operational data for fast diagnosis.
KSBU-N	Smart-Board™ Advanced Control with Network - Network capable.
KPFSA223	Side Air Flow Kit for 23" Tall Prodigy Flaker and Nugget
ERC111-1A	Remote Condenser for N0622R, 115V/60/1
RTE10	Line set, Precharged, R-404A, 10 ft.
RTE25	Line set, Precharged, R-404A, 25 ft.
RTE40	Line set, Precharged, R-404A, 40 ft.
RTE75	Line set, Precharged, R- 404A-75 ft
KPAS	Prodigy Advanced Sustainability kit- Includes KVS and KSBU-N

* Scotsman recommends all ice machines have water filtration. See Scotsman Sanitation Matrix for details.

Operating Requirements

	Minimum	Maximum
Air Temperatures	50°F (10°C)	100°F (38°C)
Water Temperatures	40°F (4.4°C)	100°F (38°C)
Remote Cond. Temps	-20°F (-29°C)	120°F (49°C)
Water Pressures	20 PSIG (1.4 bar)	80 PSIG (5.5 bar)
Electrical Voltage	-10%	+10%

Specifications and design are subject to change without notice.

Scotsman Ice Systems · 775 Corporate Woods Parkway · Vernon Hills, IL 60061
1-800-SCOTSMAN
Fax: 847-913-9844
E-mail: customer.relations@scotsman-ice.com

© 2013 Scotsman Ice Systems.

SIS-SS-PRD-N0622

Scotsman
Ice Systems

ID150 / ID200 / ID250 – Ice Dispensers

Ice Only Counter Top Dispensers

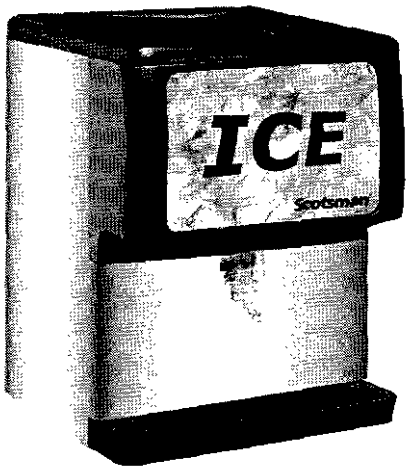

ID250

Features

Three sizes to fit the needs of any application.

Heavy-duty agitator motor for long life.

Adjustable off-cycle agitation for various ice forms and ambient conditions.

Heavy-duty agitator reduces ice jams and bridging.

Reliably dispenses nugget ice with confidence.

Insulated, heavy-duty drip tray prevents condensation.

Greater dispensable ice for periods of peak demand.

All components front accessible.

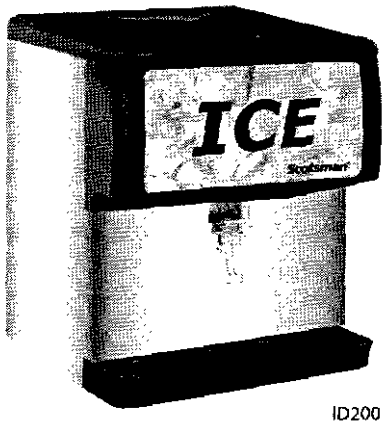

ID200

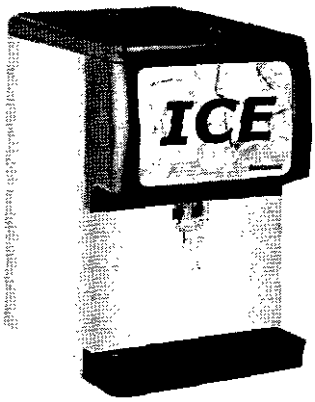

ID150

c UL us NSF

CERTIFIED ISO 9001:2008

Machine Stands

For installation where counter space is not available to accomodate an ice only dispenser unit, the IOBDMS22 & IOBDMS30 machine stands are the solution.

Warranty

- 1 year labor on all components.
- 2 years parts on all components.

Warranty valid in North, South & Central America. Contact factory for warranty in other regions.

Scotsman Ice Systems · 775 Corporate Woods Parkway · Vernon Hills, IL 60061
1-800-SCOTSMAN
Fax: 847-913-9844
E-mail: customer.relations@scotsman-ice.com

ID150 / ID200 / ID250 – Ice Dispensers

Scotsman
Ice Systems

Revit drawings available at
www.scotsman-ice.com

REVIT BY Scotsman

ID150 / ID200 / ID250 – Ice Dispensers

Installation Note: Allow 6" space at left, back and right side for ventilation and utility connections.
Recommended counter opening size 9" x 12" for utilities and tubing. Opening can be located anywhere within the shaded area.

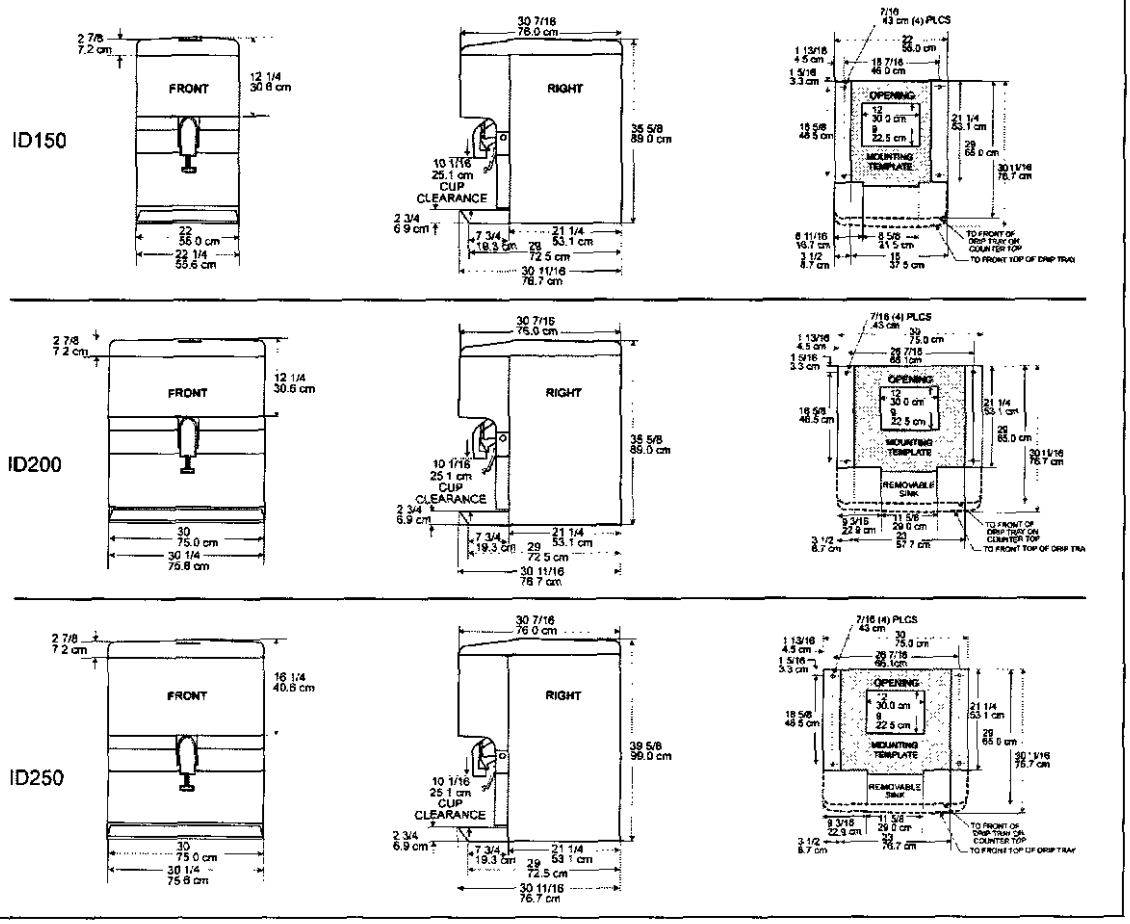

Specifications

Model Number	Dimensions* (W x D x H)	Storage Capacity (lb/kg)	Actuation	Basic Electrical Volts/Hz/Phase	Max. Fuse Size or HACR Circuit Breaker (amps)	Circuit Wires	Min. Circuit Ampacity
ID150	22" x 30" x 35.63"	150 / 68	Push Bar	115/60/1	15	2	Cord
ID200	30" x 30" x 35.63"	200 / 91	Push Bar	115/60/1	15	2	Cord
ID250	30" x 30" x 39.63"	250 / 114	Push Bar	115/60/1	15	2	Cord

All units with stainless steel finish and plastic front and top panels. Not designed for outdoor installations.
* Add 4" height for legs

Shipping

Model #	Carton (W x D x H)	Weight (lb/kg)
ID150	25" x 35" x 46"	150 / 68
ID200	35" x 36" x 46"	195 / 89
ID250	35" x 36" x 46"	200 / 91

Accessories

Model Number	Description
IOBDMS22	Machine Stand for ID150
IOBDMS30	Machine Stand for ID200 & ID250
KNUGDIV	Field Installed Nugget Ice Kit for All ID Dispensers
KWGFID	Field Installed Water Glass Filler Kit for All ID Dispensers
KMER150	Merchandiser ID150
KMER200	Merchandiser ID200
KMER250	Merchandiser ID250

Specifications and design are subject to change without notice.

Scotsman Ice Systems - 775 Corporate Woods Parkway - Vernon Hills, IL 60061
1-800-SCOTSMAN
Fax: 847-913-9844
E-mail: customer.relations@scotsman-ice.com

© 2012 Scotsman Ice Systems.

SIS-SS-DIS-ID 06-12

Manitowoc

RN-400 Tubular Nugget Ice Machine

RN-400 Tubular Nugget Ice Machine

Models

☐ RN-0408A

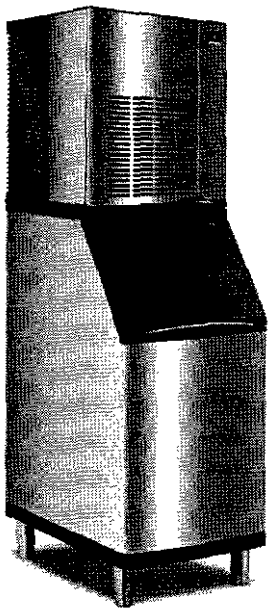

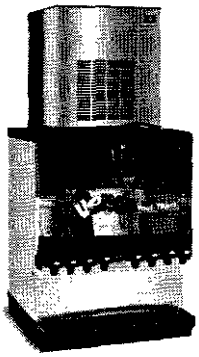

RN-0408A Nugget Ice Machine on Servend SV-250 Dispenser

RN-0408A Nugget Ice Machine on B-420 Bin

Standard Features

- Up to 385 lbs. (175 kgs) daily ice production.
- Only 22" (55.9 cm) wide.
- Perfect for beverage applications, dispensing and cold therapy.
- Evaporator is designed for maximum quality and operating life.
- 90% ice to water ratio and longer pieces makes tubular nugget ideal for dispensing without congealing.
- Great for blended drinks with less wear on blender and smoother texture.
- Optional 9" discharge tube ships in carton for dispense applications.

Specifications

BTU Per Hour: 5,000
Compressor:
Nominal rating: 1/2 HP

Refrigerant: R404A

Operating Limits:

- Ambient Temperature Range: 50°-100°F (10.0°C-37.8°C)
- Water Temperature Range: 45°-90°F (7.2°-32.2°C)
- Water Pressure Ice Maker Water In:
  Min. 20 psi (137.9 kPA)
  Max. 70 psi (483 kPA)

Ice Machine Electric

115/60/1 ice machines are factory pre-wired with a 7' (2m) power cord and NEMA 5-20 right angle plug configuration.

Total Amps: 11 amps

Maximum fuse size: 20 amps

Ice Shape

- Tubular Nugget Ice provides a softer, chewable texture while still providing maximum cooling effect.
- 5/8" (1.59 cm) diameter cylindrical-shaped nugget with average length of approximately 1" (2.54 cm).

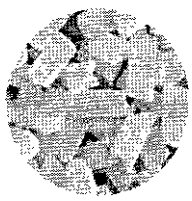

NSF c UL US LISTED AutoQuotes

2110 South 26th Street
PO Box 1720
Manitowoc, WI 54221-1720 USA

Tel: 1.920.682.0161
Fax: 1.920.683.7589

www.manitowocice.com

Manitowoc

Manitowoc

RN-400 Tubular Nugget Ice Machine

RN-400 on B-420 Storage Bin

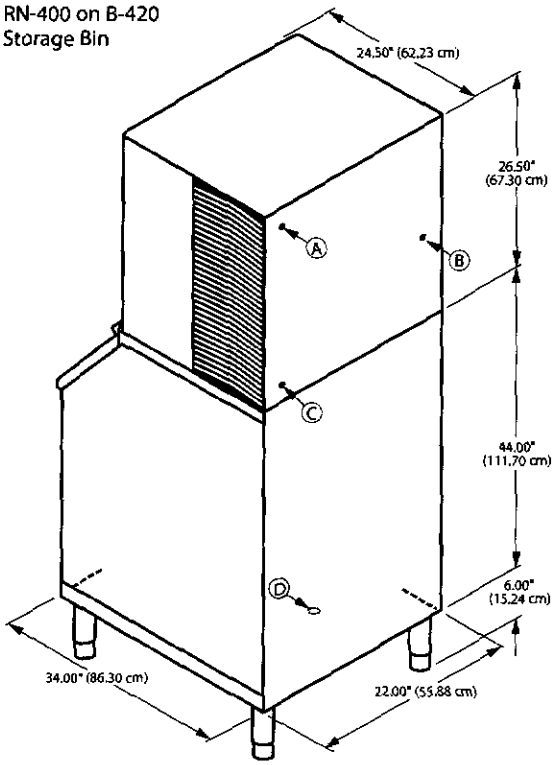

Ⓐ 3/8" F.P.T. Ice Making Water Inlet
Ⓑ Electrical Entrance
Ⓒ 3/4" M.P.T. Ice Making Water Drain
Ⓓ 3/4" Bin Drain

Installation Note -
Minimum installation clearance: Top/sides: 8" (20.32 cm), back: 5" (12.7 cm).

Dispenser Note -
Verify with the dispenser manufacturer that the correct agitator and deflector kit for nugget ice dispensing is included with your dispenser purchase.

Space Saving Designs

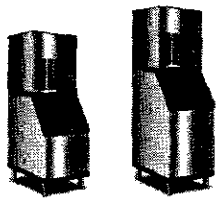

	RN-400 B-320	RN-400 B-420
Height	64.50" 168.83 cm	76.50" 194.3 cm
Width	22.00" 55.88 cm	22.00" 55.88 cm
Depth	34.00" 86.30 cm	34.00" 86.30 cm
Bin Storage	210 lbs. 95 kgs	310 lbs. 141 kgs

Height includes adjustable bin legs 6.00" to 7.00", (15.24 to 17.78 cm) set at 6.00" (15.24 cm).

Air Flow Top View

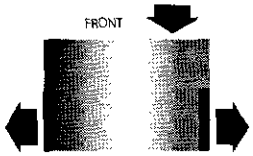

Specifications

	Model	Ice Shape	Ice Production 24 Hours: 70°Air/ 50°F Water	Ice Production 24 Hours: 90°Air/ 70°F Water	Power Usage kWh/100 lbs.@90°Air/70°F	Potable Water Usage/ 100 lbs. 45.4 kgs of Ice
AIR-COOLED	RN-0408A	Nugget	385 lbs.	294 lbs.	6.38	12.6 Gal.
			175 kgs	133 kgs		47.7 L

Order ice storage bin separately. "A" following model number indicates "Air" condensing unit.
Will not accept AuCS accessory.

47354 ©2011 Manitowoc 7/11 Continuing product improvement may necessitate change of specifications without notice.

2110 South 26th Street
PO Box 1720
Manitowoc, WI 54221-1720 USA

Tel: 1.920.682.0161
Fax: 1.920.683.7589
www.manitowocice.com

Manitowoc

Servend

S-150 • S-200 • S-250 Ice Dispensers

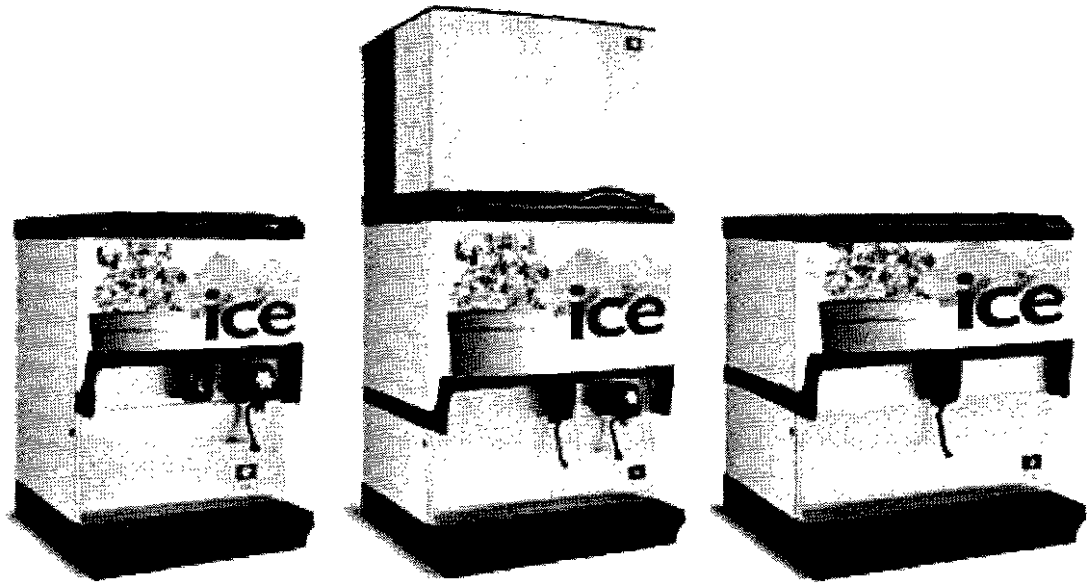

S-150 with water valve | S-250 with water valve | S-200

Servend's S-Series ice dispensers feature a no-hassle one-piece structural base, strengthened drive train, and modular design, all resulting in a more durable ice dispenser.

Standard Features

- Servend's patented paddle wheel ice dispense technology maximizes counter space.
- Use with Multiplex remote refrigeration unit with optional beverage valves.
- One-piece ABS base provides a solid foundation as well as adding structural rigidity to the dispenser.
- Enhanced agitation and drive system provides consistent ice dispense and ease of serviceability.
- Patented Rocking Chute™ simplifies ice dispensing and storage.
- Surround View™ merchandiser with attractive "ice" graphics draws customer attention.

ISO 9001:2000 Quality System Certified

2100 Future Drive
Sellersburg, IN 47172 USA

Tel: 812.246.7000
Fax: 812.246.7024

www.manitowocbeverage.com/us

Manitowoc

S-150 • S-200 • S-250 Ice Dispensers

Servend

S-150 • S-200 • S-250 Ice Dispensers

Specifications

	S-150	S-200	S-250
Standard Features	Lighted merchandiser, ice graphics, leg kit, and drain kit.		
Approx. Shipping Weights	185.12 lbs. / 69.09 kgs.	235 lbs. / 107 kgs.	260 lbs. / 152 kgs.
Countertop Weight (w/o ice)	133.12 lbs. / 60.38 kgs.	184 lbs. / 69 kgs.	204 lbs. / 118 kgs.
Ice Storage Capacity	Up to 150 lbs. / 68 kgs.	Up to 200 lbs. / 91 kgs.	Up to 250 lbs. / 114 kgs.
Electrical Requirements	Dispenser: 120V/60Hz/2.8FLA. 220V/50Hz/1 also available.		
Drain	Single 0.75" (1.91 cm) PVC (N.P.T.) drain fitting extends from drain pan Units can be drained from the bottom or back of unit.		
Ice Machine Compatibility	Manual fill or top-mount with compatible ice machines. Contact MBE for adapter kit requirements for top-mounted ice machine applications.		
Options	Flomatic water valve. Side splash panels. Flomatic 424 and 464 beverage valves, available in sanitary lever, push button, portion control and autofill valve. Other valves available, contact factory for details.		

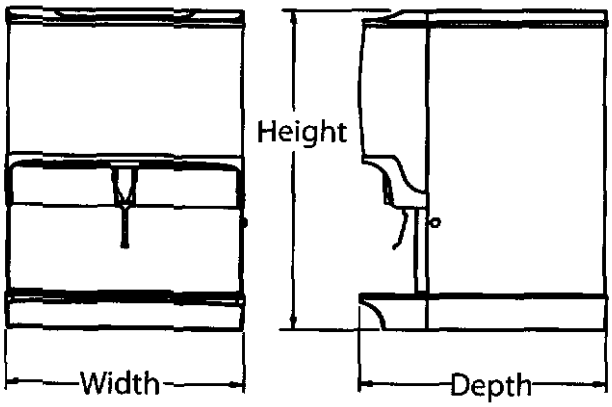

	S-150	S-200	S-250
Width	23.00"	30.00"	30.00"
	58.42 cm	76.20 cm	76.20 cm
Depth	31.13"	31.13"	31.13"
	79.07 cm	79.07 cm	79.07 cm
Height*	34.88"	34.88"	40.88"
	88.60 cm	88.60 cm	103.8 cm

*Height dimension without full lid.
Add .50" (1.27 cm) for full lid.

37698 ©2010 Servend 3/10 Continuing product improvement may necessitate change of specifications without notice.

2100 Future Drive
Sellersburg, IN 47172 USA

Tel: 812.246.7000
Fax: 812.246.7024
www.manitowocbeverage.com/us

Mixed Sources
FSC
Manitowoc

Item # _____ C.S.I. Section 11420

STEAM

KELT SERIES
ELECTRIC FLOOR MOUNTED TILTING ⅔ JACKETED KETTLE

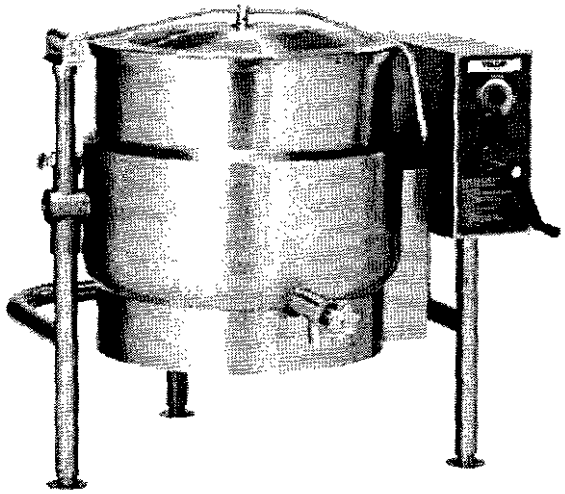

Model K40ELT

- ☐ **K20ELT** 12 KW, 20 gallon true working capacity
- ☐ **K40ELT** 18 KW, 40 gallon true working capacity
- ☐ **K60ELT** 18 KW, 60 gallon true working capacity

STANDARD FEATURES

- Electric self-contained, stainless steel, ⅔ jacketed floor mounted tilting steam kettle.
- Ellipsoidal bottom kettle liner formed and fully welded standard type 316 and type 304 stainless steel exterior.
- Bar rim (¼ x ⅝ inch 20 gallons) (⅜ x 1 inch 40 gallons and greater).
- Embossed gallon/liter markings.
- 50 psi (3.4 kg/cm²) steam jacket rating.
- Stainless steel enclosure for "water resistant" controls, self-locking tilt mechanism and faucet bracket.
- Controls include a power switch, power "on" light, solid state temperature control, vacuum/pressure gauge, pressure relief valve, low water light and lower water shut-off.
- Kettle tilts forward 90° to completely empty.
- Tubular stainless steel legs with flanged feet.
- One year limited parts and labor warranty.

OPTIONS

- ☐ Two inch compression tangent draw-off valve with perforated strainer.
- ☐ Two inch plug tangent draw-off valve with perforated strainer.
- ☐ Three inch compression tangent draw-off valve with perforated strainer.
- ☐ Correction facility package:
  a. Security type fasteners with tack welds.
  b. Stainless steel step over draw-off valve with chain.
- ☐ 480 volt, 60 Hz, 3 phase power supply.
- ☐ Increase to 24 kW for 40 - 60 gallon models (3 phase only).
- ☐ Increase to 33 kW for 60 gallon models (3 phase only)
- ☐ Second year extended limited parts and labor warranty.

ACCESSORIES (Packaged & Sold Separately)

- ☐ Spring assist hinged stainless steel cover with condensate ring and drop down lift handle.
- ☐ Perforated stainless steel basket assembly (single – 20 gallon) (triple – 20 through 60 gallon).
- ☐ Pouring lip strainer.
- ☐ Clean-up kit, includes draw-off brush, clean-up brush and paddle scrapper with 40" handle.
- ☐ Stainless steel 48" whip.
- ☐ Solid disk.
- ☐ (12") (18" double jointed) single pantry lead-free faucet.
- ☐ (12") (18" double jointed) double pantry lead-free faucet.
- ☐ Double pantry washdown hose with 16" add-on lead-free faucet with vacuum breaker.
- ☐ Double pantry washdown hose with lead-free vacuum breaker.
- ☐ Double pantry pot filler with lead-free vacuum breaker.

SPECIFICATIONS

Electric self-contained, stainless steel, ⅔ jacketed floor mounted tilting steam kettle, Vulcan-Hart Model No. _____. Ellipsoidal bottom kettle liner formed and fully welded type 316 and type 304 stainless steel exterior with (¼ x ⅝ inch 20 gallons) (⅜ x 1 inch 40 gallons and greater) bar rim, embossed gallon/liter markings. 50 psi (3.4 kg/cm²) steam jacket rating. Stainless steel enclosure for controls, self-locking tilt mechanism and faucet bracket. Controls include a power switch, power "on" light, solid state temperature control, vacuum/pressure gauge, pressure relief valve, low water ight and low water shut-off. Kettle tilts forward 90° to completely empty. Tubular stainless steel legs with flanged feet.

UL listed. UL Classified for sanitation in accordance with ANSI/NSF Standard #4. Meets ASME code.

VULCAN
a division of ITW Food Equipment Group LLC
P.O. Box 696 ■ Louisville, KY 40201 ■ Toll-free: 1-800-814-2028 ■ Local: 502-778-2791 ■ Quote & Order Fax: 1-800-444-0602

STEAM

KELT SERIES
ELECTRIC FLOOR MOUNTED TILTING ⅔ JACKETED KETTLE

SERVICE CONNECTIONS

Electrical connection: Single point supply 1⅛" (29 mm) dia. (¾" conduit).

TRUE WORKING CAPACITIES (in 4 oz. servings)

80 quarts/20 gallons/76 liters/640 servings
120 quarts/40 gallons/152 liters/1,280 servings
160 quarts/60 gallons/228 liters/1,920 servings

NOTE:

- Dimensions which locate the above connections have a tolerance of + or -3" (+ or -75 mm).
- Installation of backflow preventers, vacuum breakers and other specific code requirements is the responsibility of the owner and installer. It is the responsibility of the owner and installer to comply with local codes.
- This appliance is manufactured for commercial installation only and is not intended for home use.

MODEL	kW	PHASE	AMPERAGE PER LINE			MINIMUM CIRCUIT AMPACITY		
			208V	240V	480V	208V	240V	480V
K20ELT	12	1	57.7	—	—	75	—	—
		3	33.3	—	14.4	45	—	20
	16	1	—	66.7	—	—	85	—
		3	—	38.5	—	—	50	—
Standard K40ELT K60ELT	18	3	50.0	43.3	21.7	65	55	30
Optional K40ELT K60ELT	24	3	66.6	57.7	28.9	85	75	40
Optional K60ELT	33	3	91.6	79.4	39.7	115	100	50

	STANDARD DEVICE	STANDARD DEVICE	OPTIONAL DEVICE
	Shipped for 208/50/60/3 electrical service. Can be field converted to 208/50/60/1 and 240/50/60/3 and 240/50/60/1	Shipped for 208/50/60/3 electrical service. Can be field converted to 208/50/60/1	Shipped for 240/50/60/3 electrical service. Can be field converted to 240/50/60/1
K20ELT	✓	N/A	N/A
K40ELT	N/A	✓	✓
K60ELT	N/A	✓	✓

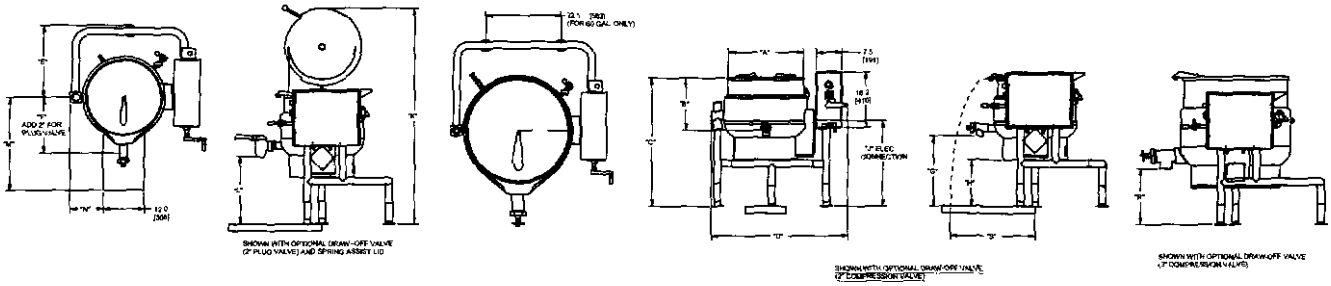

MODEL	TRUE WORKING CAPACITY	A	B	C	D	E	F	G	H	J	K	L	M	N	R	S
K20ELT	20 gallons	21.8	15.4	37.4	39.7	21.3	16.3	20.5	13.6	24.9	63.2	19.6	27.1	9.7		25.1
	76 liters	554	391	950	1008	541	414	521	345	632	1605	498	688	246		638
K40ELT	40 gallons	25.8	21.2	39.7	43.5	24.=	18.1	16.9	12.0	22.9	69.4	16.0	32.1	11.7	15.9	30.1
	152 liters	655	538	1008	1105	610	460	429	305	582	1763	406	815	297	404	765
K60ELT	60 gallons	29.7	24.1	43.1	47.5	26.8	20.3	17.3	10.8	24.3	76.6	16.6	34.8	13.8	16.3	32.8
	227 liters	754	612	1095	1207	681	516	439	274	617	1946	422	884	351	414	833

VULCAN
a division of ITW Food Equipment Group LLC
P.O. Box 696 ■ Louisville, KY 40201 ■ Toll-free: 1-800-814-2028 ■ Local: 502-778-2791 ■ Quote & Order Fax: 1-800-444-0602

NOTE: In line with its policy to continually improve its products, Vulcan reserves the right to change materials and specifications without notice.

ELECTRIC STEAM TILTING KETTLE

Job _____ Item# _____

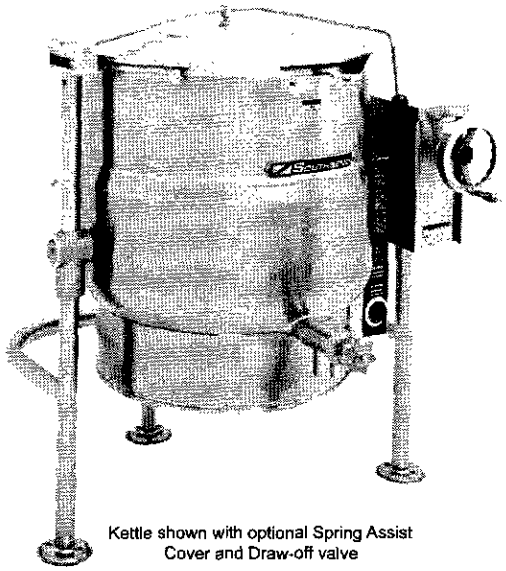

Kettle shown with optional Spring Assist Cover and Draw-off valve

MODEL	CAPACITY	
KELT-20	20 Gallon	76 Liter
KELT-30	30 Gallon	114 Liter
KELT-40	40 Gallon	152 Liter
KELT-60	60 Gallon	227 Liter
KELT-80	80 Gallon	303 Liter
KELT-100	100 Gallon	379 Liter

OPERATION SHALL BE BY:

Electrically, self-generating closed steam system operating at 50 psi equipped for operation on:

- ❑ 208 VAC, 1 Phase, 50/60 Hz. (20 and 30 gallon only)
- ❑ 208 VAC, 3 Phase, 50/60 Hz.
- ❑ 240 VAC, 1 Phase, 50/60 Hz. (20 and 30 gallon only)
- ❑ 240 VAC, 3 Phase, 50/60 Hz.

OPTIONAL ITEMS AT EXTRA COST:

- ❑ Type 316 stainless steel liner (60, 80 and 100 gallon models)
- ❑ *2" (50 mm)* draw-off valve (TVT-2)
- ❑ *3" (76 mm)* draw-off valve (TVT-3)
- ❑ *2" (50 mm)* dairy valve (DDO-2T)
- ❑ *3" (76 mm)* dairy valve (DDO-3T)
- ❑ 24 kw on 40, 60, 80 gallon
- ❑ 33 kw on 60, 80, 100 gallon
- ❑ 220 VAC, 1 Phase, 50/60 Hz (20 and 30 gallon only)
- ❑ 220 VAC, 3 Phase, 50/60 Hz.
- ❑ 380 VAC, 3 Phase, 50/60 Hz.
- ❑ 415 VAC, 3 Phase, 50/60 Hz.
- ❑ 480 VAC, 3 Phase, 50/60 Hz.
- ❑ 600 VAC, 3 Phase, 50/60 Hz.
- ❑ 380/220 VAC, 3 Phase, 50/60 Hz. 4 wire
- ❑ 415/240 VAC, 3 Phase, 50/60 Hz. 4 wire
- ❑ Spring assist hinged cover for 20, 30 or 40 gallon models (CH-)
- ❑ Etched gallon markings (GM-)
- ❑ Etched litre markings(LM-)
- ❑ Correctional package

ACCESSORIES:

- ❑ One piece lift off cover (C-)
- ❑ Triple basket assembly (TBA-)
- ❑ Perforated strainer for draw-off valve (TPS-)
- ❑ Solid stainless steel disc for draw-off valve (TSS-)
- ❑ Graduated measuring strip (CMS-)
- ❑ Strainer hook (SH)
- ❑ Single pantry faucet with swing spout (SF-18)
- ❑ Double pantry faucet with swing spout (DF-18)
- ❑ Pan support (PC-1)
- ❑ Pour lip strainer (TKS-)
- ❑ Draw-off valve hose kit (DVHK-2)
- ❑ Calibrated thermostat dial "F"
- ❑ Calibrated thermostat dial "C"

SPECIFICATIONS:

Shall be a Southbend Model_____ , self-generating, electric tilting kettle. A double wall kettle interior shall form a steam jacket around the lower 2/3 of the kettle. The jacket enclosure shall contain distilled water which is factory sealed. The bottom of the kettle shall be of hemispherical design for superior heat circulation.

The console shall be drip proof, stainless steel clad and shall be supported on all welded, 1-5/8" (41 mm) diameter stainless steel pipe frame and legs fitted with 4 hole adjustable flanged feet for securing to floor.

The kettle shall pivot on a trunnion connected to the tilt mechanism and the out-bore bearing connected to the frame and shall permit the kettle to tilt forward a full 90° for complete emptying. The tilt mechanism shall be self locking for positive stop action.

Construction shall be all welded #4 finish stainless steel, type 304. The interior on the 20, 30 and 40 gallon models shall be standard stainless stel typ 316 for high acid content cooking. The controls shall be integrally mounted and shall include a power switch, thermostat, pilot light, low water light, vacuum/pressure gauge, safety relief valve, and low water shut off.

The kettle shall be standard with removable elements. The kettle shall operate in a temperature range of 165°F to 285°F *(74°C to 140°C)* at a maximum pressure of 50 psi *(345kPa)*.

Models: ☐ KELT-20 ☐ KELT-30 ☐ KELT-40 ☐ KELT-60 ☐ KELT-80 ☐ KELT-100

Model	Shipping Weight	Minimum Clearance	
KELT-20	296 lbs. [134 kg]	SIDES	0" [0 mm]
KELT-30	313 lbs. [142 kg]		
KELT-40	352 lbs. [160 kg]		
KELT-60	417 lbs. [189 kg]	BACK	0" [0 mm]
KELT-80	520 lbs. [236 kg]		
KELT-100	630 lbs. [286 kg]		

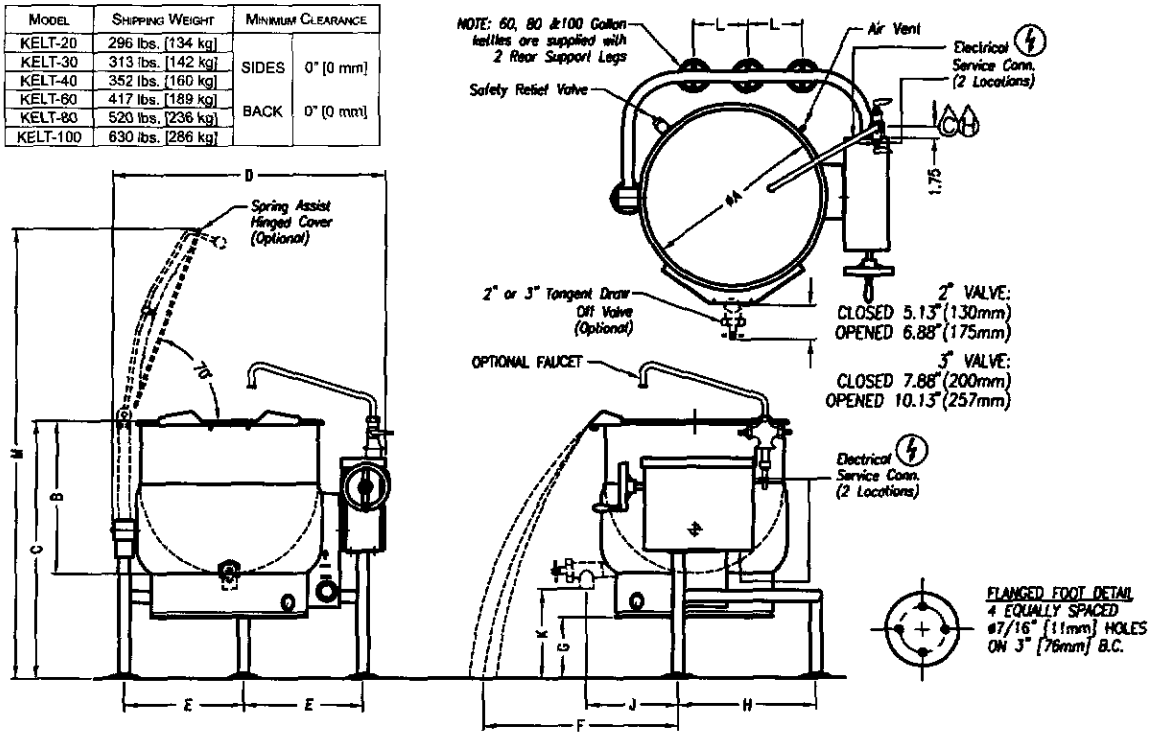

SERVICE CONNECTIONS

Ⓔ – ELECTRICAL CONNECTION : Unless otherwise specified, field wire electrical connection to be 120 volts, 60 Hz, 1 phase with grounding wire. Unit furnished with 6' cord and 3 prong plug. Total maximum amps 4.0.

Ⓒ – COLD WATER: 3/8" (10 mm) tubing to faucet (optional)

Ⓗ – HOT WATER: 3/8" (10 mm) tubing to faucet (optional)

DIMENSIONS

Model	Capacity	Units	A	B	C	D	E	F	G	H	J(2")	J(3")	K(2")	K(3")	L	M
KELT-20	20 gallons (76 liters)	in (mm)	21" (533)	18" (457)	38" (965)	36" (914)	15" (381)	18" (457)	14" (356)	19.25" (489)	14.75" (375)	15.5" (394)	18" (457)	17.5" (445)	N/A	63.5" (1613)
KELT-30	30 gallons (114 liters)	in (mm)	24" (610)	20" (508)	38" (965)	39" (990)	16.5" (419)	19" (483)	12.38" (314)	19.25" (489)	16.75" (425)	17.25" (438)	16" (406)	15.5" (394)	N/A	66.5" (1689)
KELT-40	40 gallons (152 liters)	in (mm)	26" (660)	22.5" (572)	38" (965)	41" (1041)	17.5" (445)	23" (584)	10" (254)	20.25" (514)	17.5" (445)	18.5" (470)	13.5" (343)	13" (330)	N/A	68.5" (1740)
KELT-60	60 gallons (227 liters)	in (mm)	29.5" (749)	26" (660)	42" (1067)	44.5" (1130)	19.13" (486)	24" (610)	11" (280)	22.25" (565)	19.5" (495)	20.75" (527)	14" (356)	13.5" (343)	10.5" (267)	76" (1930)
KELT-80	80 gallons (303 liters)	in (mm)	33" (838)	28" (711)	45" (1143)	48" (1219)	20.88" (530)	27" (686)	12.63" (321)	23.75" (603)	20.25" (514)	21.25" (540)	15" (381)	14.5" (368)	12" (305)	82.5" (2096)
KELT-100	100 gallons (379 liters)	in (mm)	35.5" (902)	29.75" (755)	48.75" (1238)	49.5" (1257)	22.25" (565)	32" (813)	14.5" (368)	25.25" (641)	20.25" (514)	21.25" (540)	18.75" (476)	18.25" (464)	14" (356)	88.5" (2248)

Available kW		
Model	Standard	Optional
KELT-20	12	N/A
KELT-30	15	N/A
KELT-40	18	24
KELT-60	18	24 or 33
KELT-80	18	24 or 33
KELT-100	24	33

ELECTRICAL CHARACTERISTICS

		Amps Per Line						
kW	Phase	208V	220V	240V	380V	415V	480V	600V
12	1	57.7	54.5	50.0	N/A	N/A	N/A	N/A
	3	33.3	31.5	28.9	18.2	16.7	14.4	11.6
15	1	72.1	68.2	62.5	N/A	N/A	N/A	N/A
	3	41.6	39.4	36.1	22.8	20.9	18.0	14.5
18	3	50.0	47.2	43.3	27.3	25.0	21.7	21.7
24	3	66.6	63.0	57.7	36.5	33.4	28.9	23.1
33	3	91.6	86.6	79.4	50.1	45.9	39.7	31.8

INTENDED FOR COMMERCIAL USE ONLY.
NOT FOR HOUSEHOLD USE.

SOUTHBEND
1100 Old Honeycutt Road, Fuquay-Varina, NC 27526
(919) 762-1000 www.southbendnc.com

Cleveland

ELECTRIC KETTLES

Project _____
Item _____
Quantity _____
FCSI Section _____
Approval _____
Date _____

TRI-LEG, ELECTRIC KETTLES

TILTING, "SPLASH PROOF SERIES",
SELF-CONTAINED, 2/3 STEAM JACKETED,
25, 40 or 60 GALLONS (100, 150 or 225 LITERS)

MODELS: ☐ KEL-25-T ☐ KEL-40-T ☐ KEL-60-T

Cleveland Standard Features

- Self-contained, easily installed - needs only an electrical hook-up
- Steam jacket filled with treated water, venting and/or refilling is not required
- Accurate, consistant solid state temperature controls (mechanical thermostate not as accurate) - less than ±1°C variance (ideal for simmering). Operating temperature range from 145° - 260°F (63°C - 127°C)
  Control panel includes:
  • LED indicator for heat cycle • LED indicator for low water
  • Power ON/OFF switch • Adjustable temperature control dial
- Water resistant controls, splash-proof construction
- Large pouring lip for high capacity and chunky products
- Re-inforced rolled rim design prevents damage to kettle rim, eliminates "bar rim designs"
- Welded-in heating elements, (holds vacuum better, won't leak or loose water)
- Easily cleaned: kettle and all exterior surfaces are of type 304 stainless steel with an #4 finish
- Rear mounted easy access pressure gauge and pressure relief valve to prevent tampering. Color coded easy to read pressure gauge with "green" and "vent air zone"
- 50 psi steam jacket rating for higher cooking temperatures
- 50 psi safety valve
- Solid state water level control (no sight glass gauge to break or leak)
- Splash proof element cover with a double gasket seal
- Tilt mechanism of roller bearings and case hardened self-locking worm and segment gear
- 1 5/8" O.D. tri-leg supports with level adjustable feet for floor bolting
- Standard voltage is 208-240 volts, 60 Hz, 3-phase, 3-wire
- Typical approvals include UL., CSA, CE, NSF and ASME

Options & Accessories

- ☐ Spring-assisted, hinged, rotatable, domed Stainless Steel Cover (CHS)
- ☐ 2" or 3" diameter Tangent Draw-Off Valve (TD2 or TD3*), *TD3 for 60 gallon only and will raise height of kettle by 5-5/8" (143mm)
- ☐ Hot and Cold Water Faucet with Swing Spout and Mounting Bracket (DPK and FBKT)
- ☐ Type 316 Stainless Steel Kettle Liner for high acid food products (316)
- ☐ Pan Carrier (PCK)
- ☐ Flow Diverter (FD)
- ☐ Food Strainers (FS)
- ☐ Cooking Baskets and Tri-Basket Supports (BS and TBS)
- ☐ Kettle Accessory Kit (KAK) includes:
  - ☐ Clean-up Brush (CB)
  - ☐ 36" Kettle Whip (KW)
  - ☐ Draw-Off Brush (DB)
  - ☐ 36" Kettle Paddle (KP)
  - ☐ 36" Kettle Brush
  - ☐ 24 oz. Ladle (KL)
- ☐ Automatic Water Meter (GMF or LMF)

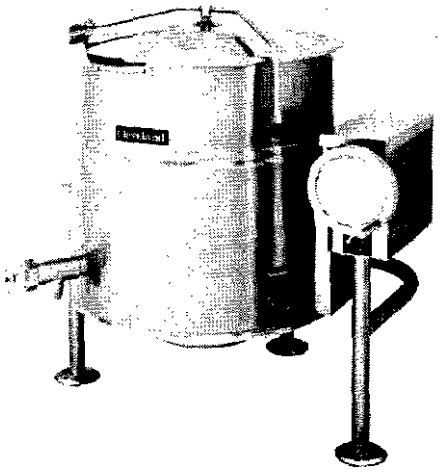

Shown with optional spring-assisted cover and 2" tangent draw-off valve

Short Form Specifications

Shall be CLEVELAND, Electric Kettle, Tri-leg mounted, self-contained, tilting, Model KEL - ___ - T; ___ gallons, 2/3 Steam Jacketed. Type 304 Stainless Steel Kettle and Supports. 50 psi Steam Jacket Rating, 50 psi Safety Valve, Permanently filled Steam Jacket, Combination Pressure/Vacuum Jacket Gauge. Splash Proof Solid State Temperature (±1° C) and Safety Control System in plug-in Module including L.E.D. indicators,

- ☐ Drain Strainers (DS-)
- ☐ Water Meter Stand (SWM)
- ☐ Lift-Off Covers (CL)
- ☐ Measuring Strip (MS)
- ☐ Gallon Markings (KM)
- ☐ Hot and cold or cold only Kettle Filler with 60" Hose (DKF-K or SKF-K)
- ☐ Swing Funnels for drain (SW)
- ☐ Alternate Mounting Systems
- ☐ High Wattage (HW) (see back page)
- ☐ Special Voltages (see back page)
- ☐ Heat Deflector Shield (HS001)
- ☐ Correctional Packages

SECT. VIII PAGE 9
0609

1333 East 179 St., Cleveland, Ohio, U.S.A. 44110
Tel: 1-216-481-4900 Fax: 1-216-481-3782
Web Site: www.ClevelandRange.com Email: Steam@ClevelandRange.com
Manitowoc

CAPACITIES: (in 8 oz. servings, other sizes may be calculated)
25 Gallon / 100 liters . . . 400 servings
40 Gallon / 150 liters . . . 640 servings
60 Gallon / 225 liters . . . 960 servings

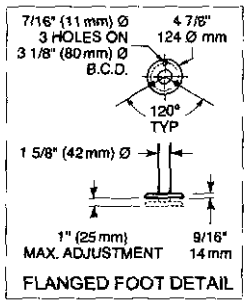

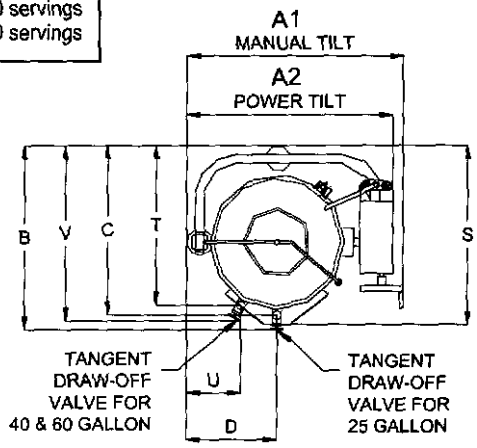

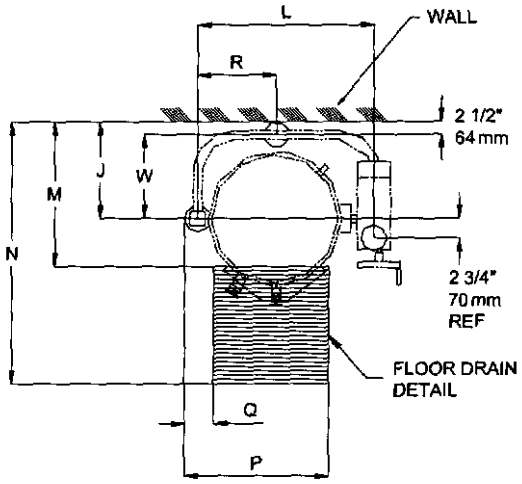

NOTE: TD3, 3" tangent draw off will raise height of kettle by 5-5/8" (143mm). Available on 60 gallon models only.

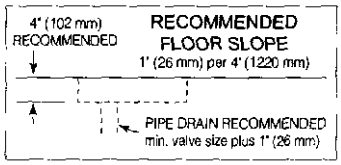

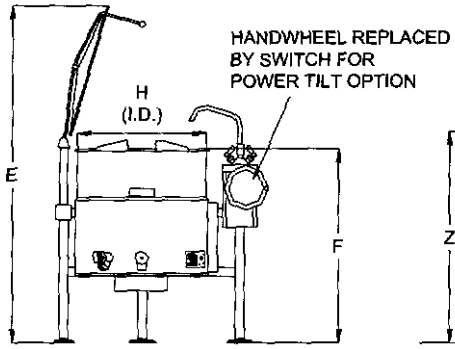

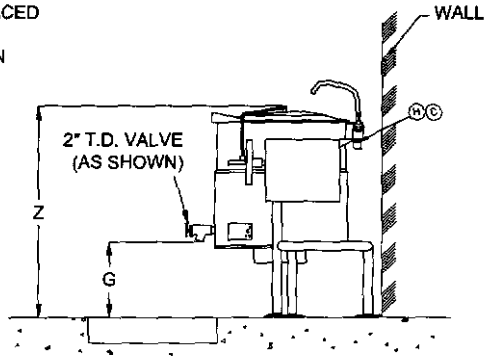

KETTLE SHOWN WITH OPTIONAL SPRING ASSIST COVER, WATER FAUCET AND T.D. VALVE

DIMENSIONS

GALS./ LITERS		A1	A2	B	C	D	E	F	G	H	J	L	M	N	P	Q	R	S	T	U	V	W	Z
25/	IN	36 1/2	31 1/4	33 3/4	29 7/8	15 1/2	62 3/4	37 1/2	14 5/8	21	17	28 3/4	22 1/4	51 3/4	24	4	14 3/8	31				14 1/2	41 1/8
100	mm	928	794	858	759	394	1594	953	372	534	432	731	566	1315	610	102	366	788				369	1045
40/	IN	41 1/2	39 3/8				68 1/2	39 1/2	13 5/8	26	20	33 3/4	26	56	28 1/2	5 1/2	16 13/16	37 3/4	34	5 1/2	37 1/8	17 1/2	42 1/2
150	mm	1055	1001				1740	1004	347	661	508	858	661	1423	724	140	428	959	864	140	943	445	1080
60/	IN	45	42 7/8				75 3/4	42 1/2	14 1/8	29 1/2	21 1/2	37 1/4	29 3/4	62 1/2	31	5 1/2	18 9/16	41 1/8	37	7 3/4	38 3/8	19	46 7/8
225	mm	1143	1090				1925	1080	359	750	547	947	756	1588	788	140	472	1045	940	197	975	483	1191

STANDARD WATTAGE

		208V			240V			415V			480V		
			AMPS	AMPS		AMPS	AMPS		AMPS	AMPS		AMPS	AMPS
GALS.	LITERS	KW	1PH	3PH	KW	1PH	3PH	KW	1PH	3PH	KW	1 PH	3PH
25	100	9.8	47.2	27.2	13.1	54.4	31.4	12.1	29.0	16.7	13.1	27.2	15.7
40	150	14.7	70.8	40.9	19.6	81.7	47.1	18.1	43.5	25.1	19.6	40.8	23.6
60	225	14.7	70.8	40.9	19.6	81.7	47.1	18.1	43.5	25.1	19.6	40.8	23.6

HIGH WATTAGE

		208V			240V			415V			480V		
			AMPS	AMPS		AMPS	AMPS		AMPS	AMPS		AMPS	AMPS
GALS.	LITERS	KW	1PH	3PH	KW	1PH	3PH	KW	1PH	3PH	KW	1 PH	3PH
25	100	14.7	70.8	40.9	19.6	81.7	47.1	18.1	43.5	25.1	19.6	40.8	23.6
40	150	24.5	NA	68.1	32.7	NA	78.6	30.1	72.5	41.8	32.7	68.1	39.3
60	225	29.4	NA	81.7	39.2	NA	94.3	36.2	87.0	50.2	39.2	81.7	47.1

Consult factory for other voltages.

WATER (H)(C)

⅜" O.D. copper tube or ½" N.P.T. pipe.

When ordered with optional faucet.

CLEARANCE

RIGHT = 4.0" handle clearance
LEFT = .00"
REAR = 2.5"

NOTES:
Cleveland Range reserves right of design improvement or modification, as warranted.
Many regional, state and local codes exist and it is the responsibility of the owner and installer to comply with the codes.
Cleveland Range equipment is built to comply with applicable standards for manufacturers. Included among those approval agencies are U.L., NSF, CGA, CSA, ETL and others.

(NOT TO SCALE)
SECT. VIII PAGE 10
0609
Litho in U.S.A.

Electric Steam Tilting Kettle

Job _____ Item# _____

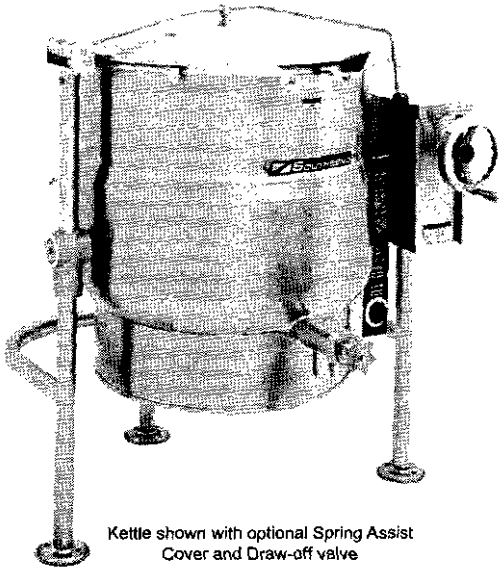

Kettle shown with optional Spring Assist Cover and Draw-off valve

Model	Capacity	
KELT-20	20 Gallon	76 Liter
KELT-30	30 Gallon	114 Liter
KELT-40	40 Gallon	152 Liter
KELT-60	60 Gallon	227 Liter
KELT-80	80 Gallon	303 Liter
KELT-100	100 Gallon	379 Liter

OPERATION SHALL BE BY:

Electrically, self-generating closed steam system operating at 50 psi equipped for operation on:

- ❑ 208 VAC, 1 Phase, 50/60 Hz. (20 and 30 gallon only)
- ❑ 208 VAC, 3 Phase, 50/60 Hz.
- ❑ 240 VAC, 1 Phase, 50/60 Hz. (20 and 30 gallon only)
- ❑ 240 VAC, 3 Phase, 50/60 Hz.

OPTIONAL ITEMS AT EXTRA COST:

- ❑ Type 316 stainless steel liner (60, 80 and 100 gallon models)
- ❑ *2" (50 mm)* draw-off valve (TVT-2)
- ❑ *3" (76 mm)* draw-off valve (TVT-3)
- ❑ *2" (50 mm)* dairy valve (DDO-2T)
- ❑ *3" (76 mm)* dairy valve (DDO-3T)
- ❑ 24 kw on 40, 60, 80 gallon
- ❑ 33 kw on 60, 80, 100 gallon
- ❑ 220 VAC, 1 Phase, 50/60 Hz (20 and 30 gallon only)
- ❑ 220 VAC, 3 Phase, 50/60 Hz.
- ❑ 380 VAC, 3 Phase, 50/60 Hz.
- ❑ 415 VAC, 3 Phase, 50/60 Hz.
- ❑ 480 VAC, 3 Phase, 50/60 Hz.
- ❑ 600 VAC, 3 Phase, 50/60 Hz.
- ❑ 380/220 VAC, 3 Phase, 50/60 Hz. 4 wire
- ❑ 415/240 VAC, 3 Phase, 50/60 Hz. 4 wire
- ❑ Spring assist hinged cover for 20, 30 or 40 gallon models (CH-)
- ❑ Etched gallon markings (GM-)
- ❑ Etched litre markings(LM-)
- ❑ Correctional package

ACCESSORIES:

- ❑ One piece lift off cover (C-)
- ❑ Triple basket assembly (TBA-)
- ❑ Perforated strainer for draw-off valve (TPS-)
- ❑ Solid stainless steel disc for draw-off valve (TSS-)
- ❑ Graduated measuring strip (CMS-)
- ❑ Strainer hook (SH)
- ❑ Single pantry faucet with swing spout (SF-18)
- ❑ Double pantry faucet with swing spout (DF-18)
- ❑ Pan support (PC-1)
- ❑ Pour lip strainer (TKS-)
- ❑ Draw-off valve hose kit (DVHK-2)
- ❑ Calibrated thermostat dial "F"
- ❑ Calibrated thermostat dial "C"

SPECIFICATIONS:

Shall be a Southbend Model_____ , self-generating, electric tilting kettle. A double wall kettle interior shall form a steam jacket around the lower 2/3 of the kettle. The jacket enclosure shall contain distilled water which is factory sealed. The bottom of the kettle shall be of hemispherical design for superior heat circulation.

The console shall be drip proof, stainless steel clad and shall be supported on all welded, 1-5/8" (41 mm) diameter stainless steel pipe frame and legs fitted with 4 hole adjustable flanged feet for securing to floor.

The kettle shall pivot on a trunnion connected to the tilt mechanism and the out-bore bearing connected to the frame and shall permit the kettle to tilt forward a full 90° for complete emptying. The tilt mechanism shall be self locking for positive stop action.

Construction shall be all welded #4 finish stainless steel, type 304. The interior on the 20, 30 and 40 gallon models shall be standard stainless stel typ 316 for high acid content cooking. The controls shall be integrally mounted and shall include a power switch, thermostat, pilot light, low water light, vacuum/pressure gauge, safety relief valve, and low water shut off.

The kettle shall be standard with removable elements. The kettle shall operate in a temperature range of 165°F to 285°F *(74°C to 140°C)* at a maximum pressure of 50 psi *(345kPa)*.

Models: ☐ KELT-20 ☐ KELT-30 ☐ KELT-40 ☐ KELT-60 ☐ KELT-80 ☐ KELT-100

Model	Shipping Weight	Minimum Clearance	
KELT-20	296 lbs. [134 kg]	SIDES	0" [0 mm]
KELT-30	313 lbs. [142 kg]		
KELT-40	352 lbs. [160 kg]		
KELT-60	417 lbs. [189 kg]	BACK	0" [0 mm]
KELT-80	520 lbs. [236 kg]		
KELT-100	630 lbs. [286 kg]		

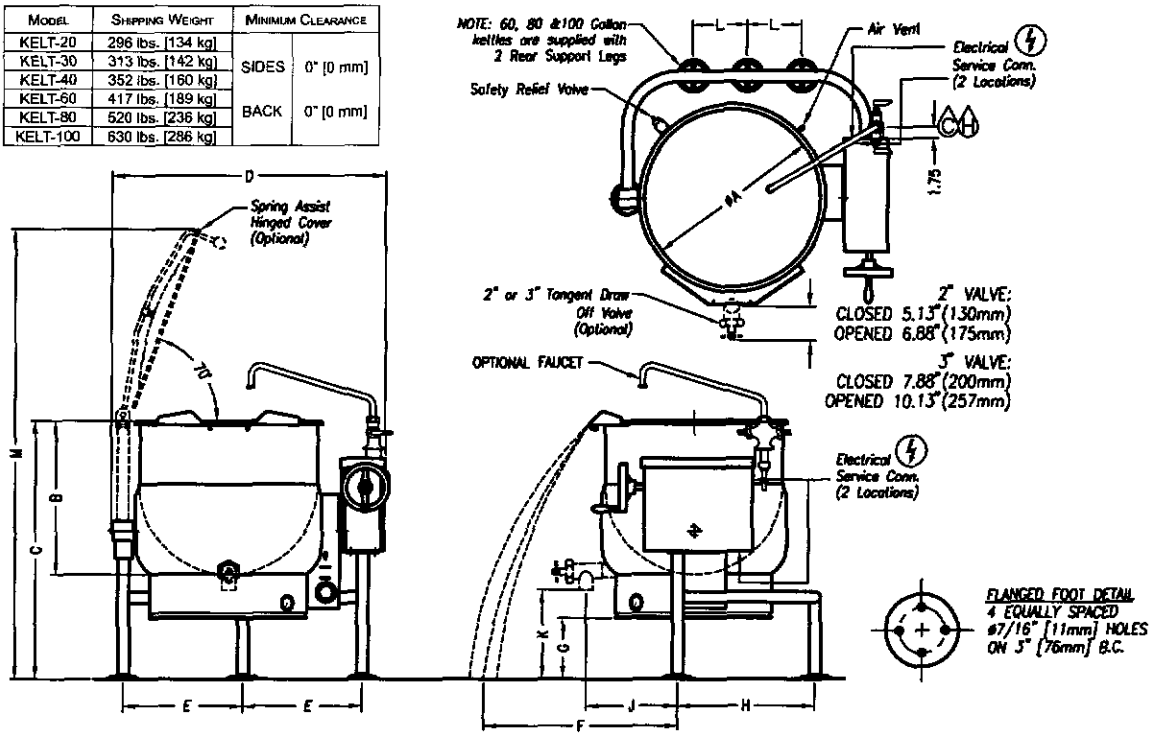

SERVICE CONNECTIONS

Ⓔ – ELECTRICAL CONNECTION : Unless otherwise specified, field wire electrical connection to be 120 volts, 60 Hz, 1 phase with grounding wire. Unit furnished with 6' cord and 3 prong plug. Total maximum amps 4.0.

Ⓒ – COLD WATER: 3/8" (10 mm) tubing to faucet (optional)

Ⓗ – HOT WATER: 3/8" (10 mm) tubing to faucet (optional)

DIMENSIONS

Model	Capacity	Units	A	B	C	D	E	F	G	H	J(2")	J(3")	K(2")	K(3")	L	M
KELT-20	20 gallons (76 liters)	in (mm)	21" (533)	18" (457)	38" (965)	36" (914)	15" (381)	18" (457)	14" (356)	19.25" (489)	14.75" (375)	15.5" (394)	18" (457)	17.5" (445)	N/A	63.5" (1613)
KELT-30	30 gallons (114 liters)	in (mm)	24" (610)	20" (508)	38" (965)	39" (990)	16.5" (419)	19" (483)	12.38" (314)	19.25" (489)	16.75" (425)	17.25" (438)	16" (406)	15.5" (394)	N/A	66.5" (1689)
KELT-40	40 gallons (152 liters)	in (mm)	26" (660)	22.5" (572)	38" (965)	41" (1041)	17.5" (445)	23" (584)	10" (254)	20.25" (514)	17.5" (445)	18.5" (470)	13.5" (343)	13" (330)	N/A	68.5" (1740)
KELT-60	60 gallons (227 liters)	in (mm)	29.5" (749)	26" (660)	42" (1067)	44.5" (1130)	19.13" (486)	24" (610)	11" (280)	22.25" (565)	19.5" (495)	20.75" (527)	14" (356)	13.5" (343)	10.5" (267)	76" (1930)
KELT-80	80 gallons (303 liters)	in (mm)	33" (838)	28" (711)	45" (1143)	48" (1219)	20.88" (530)	27" (686)	12.63" (321)	23.75" (603)	20.25" (514)	21.25" (540)	15" (381)	14.5" (368)	12" (305)	82.5" (2096)
KELT-100	100 gallons (379 liters)	in (mm)	35.5" (902)	29.75" (755)	48.75" (1238)	49.5" (1257)	22.25" (565)	32" (813)	14.5" (368)	25.25" (641)	20.25" (514)	21.25" (540)	18.75" (476)	18.25" (464)	14" (356)	88.5" (2248)

Available kW		
Model	Standard	Optional
KELT-20	12	N/A
KELT-30	15	N/A
KELT-40	18	24
KELT-60	18	24 or 33
KELT-80	18	24 or 33
KELT-100	24	33

ELECTRICAL CHARACTERISTICS

		Amps Per Line						
kW	Phase	208V	220V	240V	380V	415V	480V	600V
12	1	57.7	54.5	50.0	N/A	N/A	N/A	N/A
	3	33.3	31.5	28.9	18.2	16.7	14.4	11.6
15	1	72.1	68.2	62.5	N/A	N/A	N/A	N/A
	3	41.6	39.4	36.1	22.8	20.9	18.0	14.5
18	3	50.0	47.2	43.3	27.3	25.0	21.7	21.7
24	3	66.6	63.0	57.7	36.5	33.4	28.9	23.1
33	3	91.6	86.6	79.4	50.1	45.9	39.7	31.8

INTENDED FOR COMMERCIAL USE ONLY.
NOT FOR HOUSEHOLD USE.

SOUTHBEND
1100 Old Honeycutt Road, Fuquay-Varina, NC 27526
(919) 762-1000 www.southbendnc.com

Item # _____ C.S.I. Section 11420

STEAM

KEL SERIES
ELECTRIC FLOOR MOUNTED STATIONARY ⅔ JACKETED KETTLE

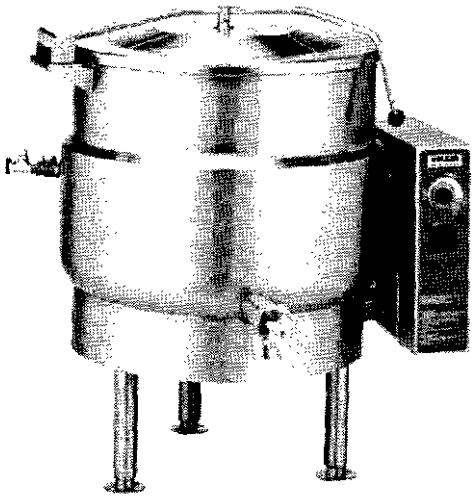

Model K40EL

- ☐ **K20EL** 12 KW, 20 gallon true working capacity
- ☐ **K40EL** 18 KW, 40 gallon true working capacity
- ☐ **K60EL** 18 KW, 60 gallon true working capacity

STANDARD FEATURES

- Electric self-contained, stainless steel, ⅔ jacketed floor mounted stationary steam kettle.
- Ellipsoidal bottom kettle liner formed and fully welded standard type 316 and type 304 stainless steel exterior.
- Bar rim (¼ x ⅝ inch 20 gallons) (⅜ x 1 inch 40 gallons and greater).
- Embossed gallon/liter markings.
- Faucet bracket.
- 50 psi (3.4 kg/cm²) steam jacket rating.
- Spring assist hinged stainless steel cover with condensate ring and drop down lift handle.
- Two inch compression tangent draw-off valve with perforated strainer.
- Tubular stainless steel legs with flanged feet.
- Stainless steel enclosure for "water resistant" controls.
- Controls include a power switch, power "on" light, solid state temperature control, vacuum/pressure gauge, pressure relief valve, low water light and low water shut-off.
- One year limited parts and labor warranty.

OPTIONS

- ☐ Two inch plug tangent draw-off valve with perforated strainer.
- ☐ Three inch compression tangent draw-off valve with perforated strainer.
- ☐ Correction facility package:
  a. Security type fasteners with tack welds.
  b. Stainless steel step over draw-off valve with chain.
- ☐ 480 volt, 60 Hz, 3 phase power supply.
- ☐ Increase to 24 kW for 40 - 60 gallon models (3 phase only).
- ☐ Increase to 33 kW for 60 gallon models (3 phase only)
- ☐ Second year extended limited parts and labor warranty.

ACCESSORIES (Packaged & Sold Separately)

- ☐ Perforated stainless steel basket assembly (single – 20 gallon) (triple – 20 through 60 gallon).
- ☐ Clean-up kit, includes draw-off brush, clean-up brush and paddle scrapper with 40" handle.
- ☐ Stainless steel 48" whip.
- ☐ Solid disk.
- ☐ (12") (18" double jointed) single pantry lead-free faucet.
- ☐ (12") (18" double jointed) double pantry lead-free faucet.
- ☐ Double pantry washdown hose with 16" add-on lead-free faucet with vacuum breaker.
- ☐ Double pantry washdown hose with lead-free vacuum breaker.
- ☐ Double pantry pot filler with lead-free vacuum breaker.

SPECIFICATIONS

Electric self-contained, stainless steel, ⅔ jacketed floor mounted stationary steam kettle, Vulcan-Hart Model No. _____. Ellipsoidal bottom kettle liner formed and fully welded type 316 and type 304 stainless steel exterior with (¼ x ⅝ inch 20 gallons) (⅜ x 1 inch 40 gallons and greater) bar rim, embossed gallon/liter markings and faucet bracket. 50 psi (3.4 kg/cm²) steam jacket rating. Spring assist hinged stainless steel cover with condensate ring and drop down lift handle. Two inch compression tangent draw-off valve with perforated strainer. Tubular stainless steel legs with flanged feet. Stainless steel enclosure for "water resistant" controls. Controls include a power switch, power "on" light, solid state temperature control, vacuum/pressure gauge, pressure relief valve, low water light and low water shut-off.

UL listed. UL Classified for sanitation in accordance with ANSI/NSF Standard #4. Meets ASME code.

VULCAN
a division of ITW Food Equipment Group LLC
P.O. Box 696 ■ Louisville, KY 40201 ■ Toll-free: 1-800-814-2028 ■ Local: 502-778-2791 ■ Quote & Order Fax: 1-800-444-0602

STEAM

KEL SERIES
ELECTRIC FLOOR MOUNTED STATIONARY ⅔ JACKETED KETTLE

SERVICE CONNECTIONS

Electrical connection: Single point supply 1⅛" (29 mm) dia. (¾" conduit).

TRUE WORKING CAPACITIES (in 4 oz. servings)

80 quarts/20 gallons/76 liters/640 servings
120 quarts/40 gallons/152 liters/1,280 servings
160 quarts/60 gallons/228 liters/1,920 servings

NOTE:

- Dimensions which locate the above connections have a tolerance of + or -3" (+ or -75 mm).
- Installation of backflow preventers, vacuum breakers and other specific code requirements is the responsibility of the owner and installer. It is the responsibility of the owner and installer to comply with local codes.
- This appliance is manufactured for commercial installation only and is not intended for home use.

	STANDARD DEVICE	STANDARD DEVICE	OPTIONAL DEVICE
	Shipped for 208/50/60/3 electrical service. Can be field converted to 208/50/60/1 and 240/50/60/3 and 240/50/60/1	Shipped for 208/50/60/3 electrical service. Can be field converted to 208/50/60/1	Shipped for 240/50/60/3 electrical service. Can be field converted to 240/50/60/1
K20EL	✓	N/A	N/A
K40EL	N/A	✓	✓
K60EL	N/A	✓	✓

MODEL	kW	PHASE	AMPERAGE PER LINE			MINIMUM CIRCUIT AMPACITY		
			208V	240V	480V	208V	240V	480V
K20EL	12	1	57.7	–	–	75	–	–
		3	33.3	–	14.4	45	–	20
	16	1	–	66.7	–	–	85	–
		3	–	38.5	–	–	50	–
Standard K40EL K60EL	18	3	50.0	43.3	21.7	65	55	30
Optional K40EL K60EL	24	3	66.6	57.7	28.9	85	75	40
Optional K60EL	33	3	91.6	79.4	39.7	115	100	50

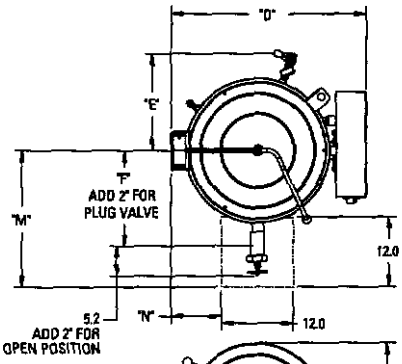

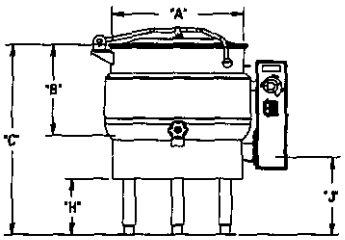

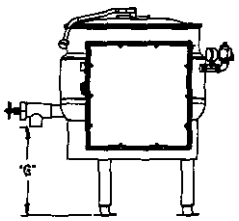

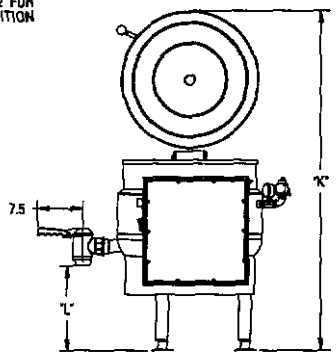

MODEL	TRUE WORKING CAPACITY	A	B	C	D	E	F	G	H	J	K	L	M	N
K20EL	20 gallons	21.6	15.2	31.86	32.5	16	16	14.7	9.3	13.9	56.7	14.3	23	8.3
	76 liters	549	386	810	826	406	406	374	236	353	1440	363	586	211
K40EL	40 gallons	25.8	21.2	37.1	37.7	17.5	17.75	14	10.5	12.8	65.8	13.5	24.8	10.5
	152 liters	656	538	942	958	445	451	356	267	325	1671	343	632	267
K60EL	60 gallons	29.5	23.9	39.5	40.5	17	19.7	13.5	8	12.2	72.4	13	27.5	12.2
	227 liters	749	607	1003	1029	432	500	343	203	310	1842	330	700	310

VULCAN
a division of ITW Food Equipment Group LLC
P.O. Box 696 ■ Louisville, KY 40201 ■ Toll-free: 1-800-814-2028 ■ Local: 502-778-2791 ■ Quote & Order Fax: 1-800-444-0602

NOTE: In line with its policy to continually improve its products, Vulcan reserves the right to change materials and specifications without notice.

Electric Steam Tri-Leg Kettle

Job _____ Item# _____

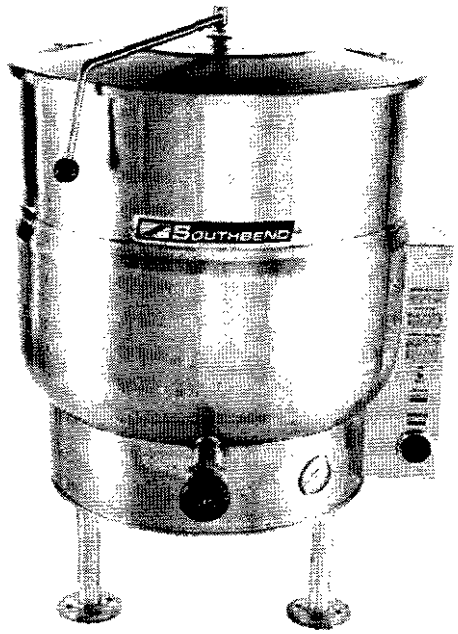

Model	kW	Capacity	
KELS-20	12	20 Gallon	76 Liter
KELS-30	15	30 Gallon	114 Liter
KELS-40	18	40 Gallon	152 Liter
KELS-60	18	60 Gallon	227 Liter
KELS-80	18	80 Gallon	303 Liter
KELS-100	24	100 Gallon	379 Liter

OPERATION SHALL BE BY:

Electrically, self-generating closed steam system equipped for operation on:

- ❑ 208 VAC, 1 Phase, 50/60 Hz. (20 and 30 gallon only)
- ❑ 208 VAC, 3 Phase, 50/60 Hz.
- ❑ 240 VAC, 1 Phase, 50/60 Hz. (20 and 30 gallon only)
- ❑ 240 VAC, 3 Phase, 50/60 Hz.

OPTIONAL ITEMS AT EXTRA COST:

- ❑ Type 316 stainless steel liner (60, 80 and 100 gallon models)
- ❑ 3" *(76 mm)* draw-off valve (TVT-3)
- ❑ 2" *(50 mm)* dairy valve (DDO-2T)
- ❑ 3" *(76 mm)* dairy valve (DDO-3T)
- ❑ 24 kw on 40, 60, 80 gallon
- ❑ 33 kw on 60, 80, 100 gallon
- ❑ 220 VAC, 1 Phase, 50/60 Hz (20 and 30 gallon only)
- ❑ 220 VAC, 3 Phase, 50/60 Hz.
- ❑ 380 VAC, 3 Phase, 50/60 Hz.
- ❑ 415 VAC, 3 Phase, 50/60 Hz.
- ❑ 480 VAC, 3 Phase, 50/60 Hz.
- ❑ 600 VAC, 3 Phase, 50/60 Hz.
- ❑ 380/220 VAC, 3 Phase, 50/60 Hz. 4 wire
- ❑ 415/240 VAC, 3 Phase, 50/60 Hz. 4 wire
- ❑ Spring assist hinged cover for 20, 30 or 40 gallon models (CH-)
- ❑ Two piece hinged stainless steel cover (2PHC-)
- ❑ Etched gallon markings (GM-)
- ❑ Etched litre markings(LM-)
- ❑ Correctional package

ACCESSORIES:

- ❑ Single pantry faucet with swing spout (SF-18)
- ❑ Double pantry faucet with swing spout (DF-18)
- ❑ One piece lift off cover (C-)
- ❑ Triple basket assembly (TBA-)
- ❑ Perforated strainer for draw-off valve (TPS-)
- ❑ Solid stainless steel disc for draw-off valve (TSS-)
- ❑ Graduated measuring strip (CMS-)
- ❑ Strainer hook (SH)
- ❑ Draw-off valve hose kit (DVHK-2)
- ❑ Calibrated thermostat dial "F"
- ❑ Calibrated thermostat dial "C"

SPECIFICATIONS:

Shall be a Southbend Model_____, self-generating, electric, tri-leg kettle, ASME Code stamped, National Board Registered, c-CSA-us and NSF certified. A double wall kettle interior shall form a steam jacket around the lower 2/3 of the kettle. The jacket enclosure shall contain distilled water which is factory sealed. The bottom of the kettle shall be of hemispherical design for superior heat circulation. Kettle will be mounted on 3 stainless steel tubular legs fitted with a 4-hole adjustable foot for securing unit to the floor.

Construction shall be all welded #4 finish stainless steel type 304. The liner on the 20, 30 and 40 gallon models shall be standard 316 for high acid content cooking. The controls shall be integrally mounted and shall include a power switch, thermostat, pilot light, low water light, vacuum/pressure gauge, safety valve, and low water shut off.

The kettle shall be standard with removable elements. The 20, 30 and 40 gallon models are supplied with a hinged, counter-balanced, stainless steel, domed cover. The 60, 80 and 100 gallon models are supplied with a spring-assist, hinged, stainless steel, domed cover. The kettle shall include a 2" (50 mm) draw-off valve.

The kettle shall operate in a temperature range of 165°F to 285°F *(74°C to 140°C)* at a maximum pressure of 50 psi *(345kPa)*.

Models: ☐ KELS-20 ☐ KELS-30 ☐ KELS-40 ☐ KELS-60 ☐ KELS-80 ☐ KELS-100

Model	Shipping Weight	Minimum Clearance	
KELS-20	196 lbs. [89 kg]	SIDES	3" [76 mm]
KELS-30	226 lbs. [103 kg]		
KELS-40	255 lbs. [116 kg]	BACK	3" [76 mm]
KELS-60	390 lbs. [177 kg]		
KELS-80	445 lbs. [202 kg]		
KELS-100	480 lbs. [218 kg]		

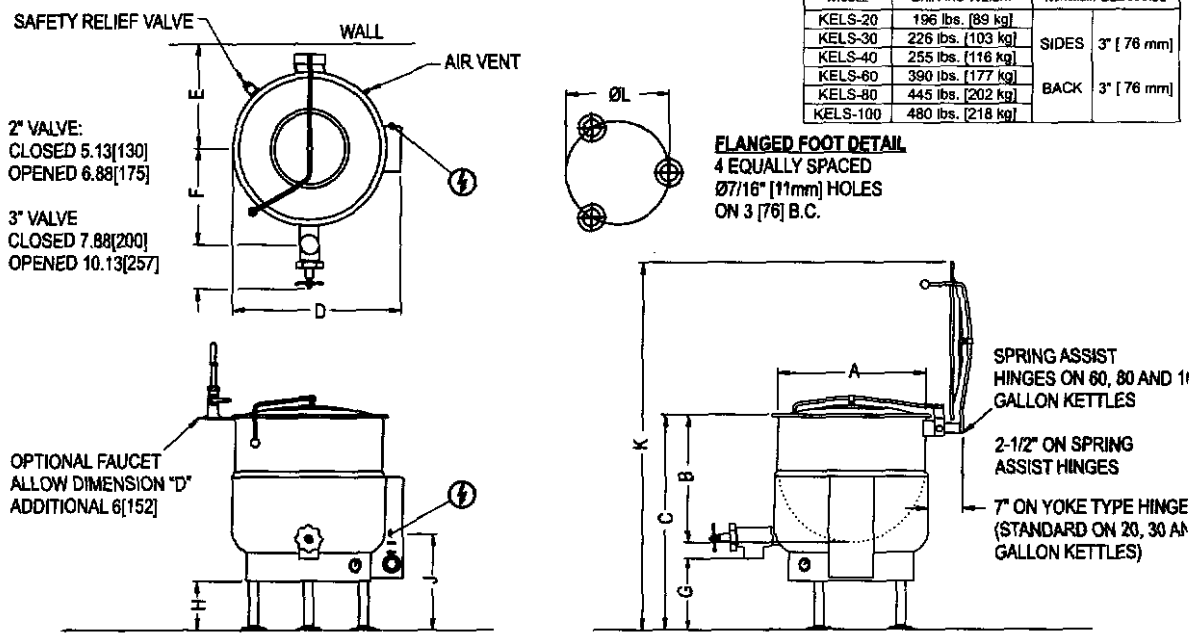

DIMENSIONS ARE IN INCHES [MM]

SERVICE CONNECTIONS

⏚ – ELECTRICAL CONNECTION : to be specified on data plate

DIMENSIONS

Model	Capacity	Units	A	B	C	D	E	F(2")	F(3")	G(2")	G(3")	H	J	K	L
KELS-20	20 gallons (76 liters)	in (mm)	21" (533)	18" (457)	38" (965)	23.75" (629)	18.5" (470)	14.75" (375)	15.5" (394)	18" (457)	17.5" (445)	14" (356)	21" (533)	60.5" (1537)	16.75" (425)
KELS-30	30 gallons (114 liters)	in (mm)	24" (610)	20" (508)	38" (965)	27.75" (705)	20" (508)	16" (406)	16.5" (419)	15.75" (400)	15.25" (387)	12.5" (318)	19" (483)	63.5" (1613)	18.31" (465)
KELS-40	40 gallons (152 liters)	in (mm)	26" (660)	22.5" (572)	38" (965)	29.75" (756)	21" (533)	17" (432)	18" (457)	13.5" (343)	13" (330)	9" (229)	17" (432)	65" (1651)	19.94" (506)
KELS-60	60 gallons (227 liters)	in (mm)	29.5" (749)	26" (660)	42" (1067)	33.75" (857)	19" (483)	18" (457)	19.25" (489)	14" (356)	13.5" (343)	11" (280)	17.25" (438)	75" (1905)	23.13" (587)
KELS-80	80 gallons (303 liters)	in (mm)	33" (838)	28" (711)	45" (1143)	36.75" (933)	20.5" (521)	19.5" (495)	20.5" (521)	15" (381)	14.5" (368)	12.75" (324)	18" (458)	81" (2058)	26.25" (667)
KELS-100	100 gallons (379 liters)	in (mm)	35.5" (902)	30" (762)	48" (1219)	40" (1016)	22" (559)	21.5" (546)	22.5" (572)	15" (381)	14.5" (368)	13" (330)	20.5" (521)	87" (2210)	29.44" (748)

ELECTRICAL CHARACTERISTICS

Available kW		
Model	Standard	Optional
KELS-20	12	N/A
KELS-30	15	N/A
KELS-40	18	24
KELS-60	18	24 or 33
KELS-80	18	24 or 33
KELS-100	24	33

		Amps Per Line						
kW	Phase	208V	220V	240V	380V	415V	480V	600V
12	1	57.7	54.5	50.0	N/A	N/A	N/A	N/A
	3	33.3	31.5	28.9	18.2	16.7	14.4	11.6
15	1	72.1	68.2	62.5	N/A	N/A	N/A	N/A
	3	41.6	39.4	36.1	22.8	20.9	18.0	14.5
18	3	50.0	47.2	43.3	27.3	25.0	21.7	21.7
24	3	66.6	63.0	57.7	36.5	33.4	28.9	23.1
33	3	91.6	86.6	79.4	50.1	45.9	39.7	31.8

INTENDED FOR COMMERCIAL USE ONLY.
NOT FOR HOUSEHOLD USE.

SOUTHBEND
1100 Old Honeycutt Road, Fuquay-Varina, NC 27526
(919) 762-1000 www.southbendnc.com

Cleveland

ELECTRIC KETTLES

Project _____
Item _____
Quantity _____
FCSI Section _____
Approval _____
Date _____

TRI-LEG, ELECTRIC KETTLES

STATIONARY, "SPLASH PROOF SERIES", SELF-CONTAINED 2/3 STEAM JACKETED, 25, 40, 60, 80 or 100 GALLONS (100, 150, 225, 300, or 375 LITERS)

MODELS: ☐ KEL-25 ☐ KEL-60 ☐ KEL-30 ☐ KEL-80 ☐ KEL-40 ☐ KEL-100

Cleveland Standard Features

- Self-contained, easily installed - needs only an electrical hook-up
- Steam jacket filled with treated water, venting and/or refilling is not required
- Accurate, consistant solid state temperature controls (mechanical thermostate not as accurate) - less than ±1°C variance (ideal for simmering). Operating temperature range from 145° - 260°F (63°C - 127°C)

  Control panel includes:
  • LED indicator for heat cycle • LED indicator for low water
  • Power ON/OFF switch • Adjustable temperature control dial
- Water resistant controls, splash-proof construction
- Re-inforced rolled rim design prevents damage to kettle rim, eliminates "bar rim designs"
- Welded-in heating elements, (holds vacuum better, won't leak or loose water)
- Easily cleaned: kettle and all exterior surfaces are of type 304 stainless steel with an #4 finish
- Rear mounted easy access pressure gauge and pressure relief valve to prevent tampering. Color coded easy to read pressure gauge with "green" and "vent air zone"
- 50 psi steam jacket rating for higher cooking temperatures
- 50 psi safety valve
- Solid state water level control (no sight glass gauge to break or leak)
- Splash proof element cover with a double gasket seal
- Faucet mounting bracket
- 2" diameter tangent draw-off valve with drain strainer
- 1 5/8" O.D. tri-leg supports with level adjustable feet for floor bolting
- Spring-assisted, hinged, rotatable, domed stainless steel cover
- Standard voltage is 208-240 volts, 60 Hz, 3-phase, 3-wire
- Typical approvals include UL., CSA, CE, NSF and ASME

Options & Accessories

- ☐ Hot and Cold Water Faucet with Swing Spout (DPK)
- ☐ Type 316 Stainless Steel Kettle Liner for high acid food products (316)
- ☐ Cooking Baskets and Tri-Basket Supports (BS and TBS)
- ☐ Kettle Accessory Kit (KAK) includes:
  - ☐ Clean-up Brush (CB)
  - ☐ 36" Kettle Whip (KW)
  - ☐ Draw-off Brush (DB)
  - ☐ 36" Kettle Paddle (KP)
  - ☐ 36" Kettle Brush (KB)
  - ☐ 24 oz. Ladle (KL)
- ☐ Automatic Water Meter (GMF or LMF)
- ☐ Water Meter Stand (SWM)
- ☐ Lift-off Covers (CL)
- ☐ Drain Strainers (DS-)
- ☐ Measuring Strip (MS)
- ☐ Kettle Markings (KM)

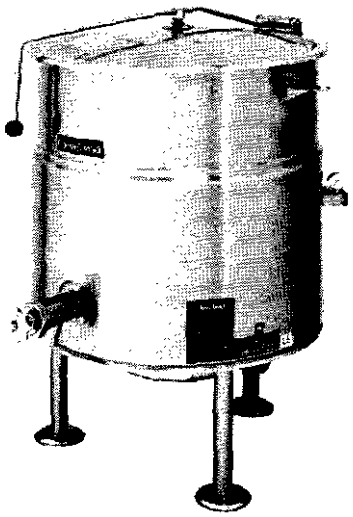

Short Form Specifications

Shall be CLEVELAND, Electric Kettle, Tri-leg mounted, self-contained, stationary, Model KEL - ____ gallons, 2/3 Steam Jacketed. Type 304 Stainless Steel Kettle and Supports. Rated 50 psi with Safety Valve; Permanently filled Steam Jacket. Spring-assisted Domed Cover. (Provide 1.50" Freeboard above batches of rated size.) Splash Proof Solid State Temperature (±1° C) and Safety Control System in plug-in Module including L.E.D. indicators. Base Mounted for Floor Bolting with three (3), tri-bolt flanges. 2" diameter Tangent Draw-off Valve.

- ☐ Hot and cold or cold only Kettle Filler with 60" Hose (DKF-K or SKF-K)
- ☐ Swing Funnels for drain (SF)
- ☐ Alternate Mounting Systems
- ☐ High Wattages and Special Voltages
- ☐ 3" diameter Tangent Draw-Off Valve w/Strainer (TD3)
- ☐ Heat Deflector Shield (HS001)
- ☐ Correctional Packages
- ☐ Insulated Outer Jacket (IOJ)

1333 East 179 St., Cleveland, Ohio, U.S.A. 44110
Tel: 1-216-481-4900 Fax: 1-216-481-3782
Web Site: www.ClevelandRange.com Email: Steam@ClevelandRange.com
Manitowoc

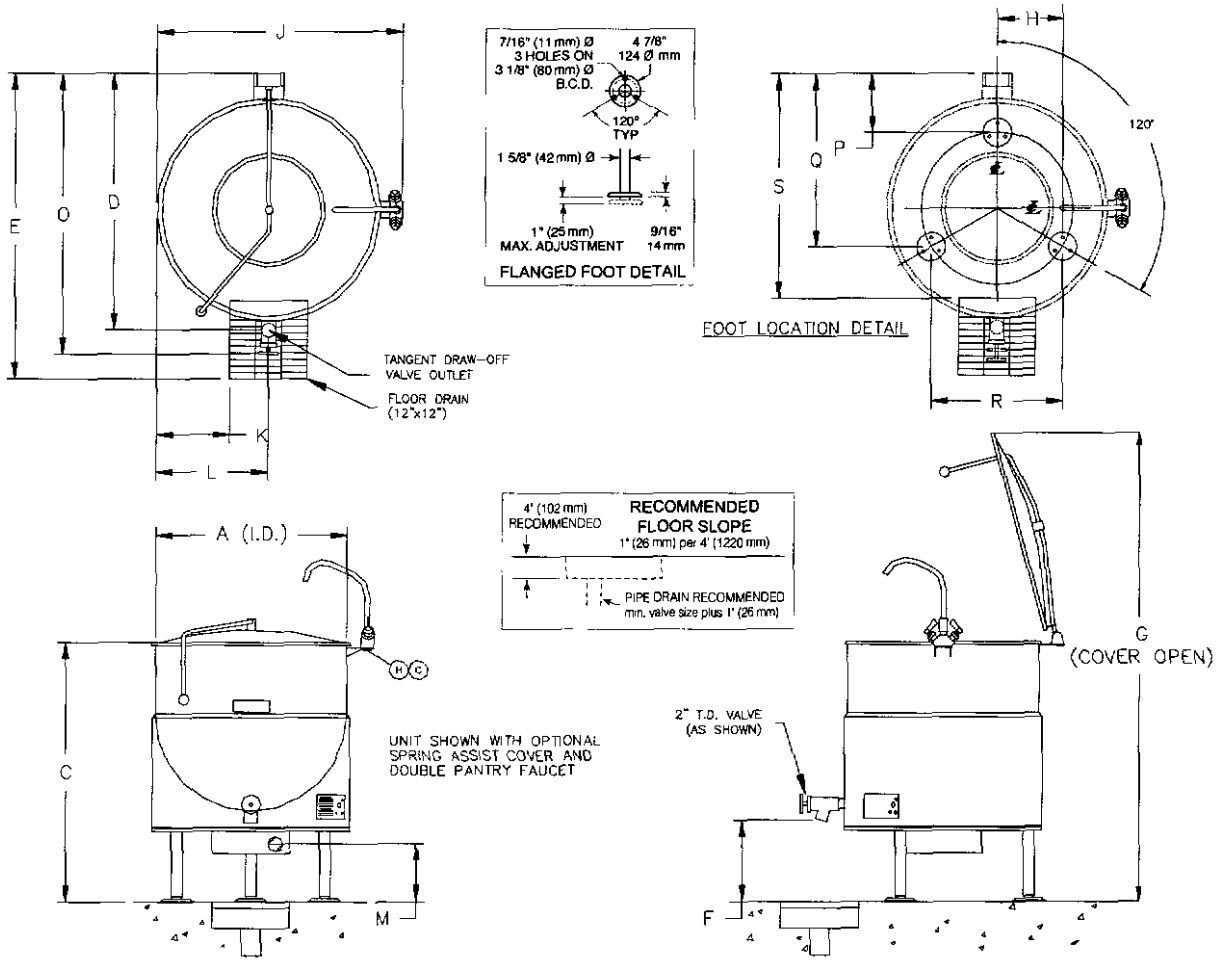

DIMENSIONS

GALS./ LITERS		A	C	D	E	F	G	H	J	K	L	M	N	O	P	Q	R	S
25/	IN	21	36 3/4	21 7/8	34	13 7/8	60 3/4	17 7/8	29 7/8	5 1/4	11 1/4	9 3/4	7 1/2	26 3/4	4 5/8	20	15 1/2	22 3/8
100	mm	534	934	556	864	353	1544	455	759	134	286	248	191	680	118	508	394	569
30/	IN	24	38	24 7/8	37	15 5/8	65 1/4	20 7/8	28 3/4	6 3/4	12 3/4	11 1/2	9 1/4	29 3/4	4 5/8	20 1/4	18 1/8	25 3/8
115	mm	610	966	632	940	397	1658	531	731	172	324	299	293	756	118	515	461	645
40/	IN	26	40	29 1/8	40	15 1/8	69 1/2	22 7/8	30 3/4	7 3/4	13 3/4	11	8 3/4	34	4 5/8	21 3/4	19 7/8	28 5/8
150	mm	661	1016	740	1016	385	1766	582	782	197	350	280	223	864	118	553	505	728
60/	IN	29 1/2	43	33	44	14 5/8	75 3/4	26 3/8	34 1/4	9 1/2	15 1/2	10 1/2	8 1/4	37 7/8	5 1/8	27 1/2	22 7/8	32 1/2
225	mm	750	1093	839	1118	372	1925	670	870	242	394	267	210	963	131	699	582	826
80/	IN	33	43 1/2	36 5/8	47	13	79 1/2	29 7/8	37 3/4	11 1/4	17 1/4	9	6 3/4	41 1/2	5 1/8	29 3/8	25 7/8	35 7/8
300	mm	839	1105	931	1194	331	2020	759	959	286	439	229	172	1055	131	747	658	912
100/	IN	35 1/2	45	39 1/4	50	12 1/2	83 3/8	32 3/8	40 1/4	12 1/2	18 1/2	8 1/2	6 1/4	44 1/8	5 1/8	5 1/8	28	38 3/8
375	mm	902	1144	997	1270	318	2118	823	1023	318	470	216	159	1121	131	131	712	975

STANDARD WATTAGE

		208V			240V			415V			480V		
			AMPS	AMPS		AMPS	AMPS		AMPS	AMPS		AMPS	AMPS
GALS.	LITERS	KW	1PH	3PH	KW	1PH	3PH	KW	1PH	3PH	KW	1 PH	3PH
25	100	9.8	47.2	27.2	13.1	54.4	31.4	12.1	29.0	16.7	13.1	27.2	15.7
30	115	12.3	59.0	34.1	16.3	68.1	39.3	15.1	36.2	20.9	16.3	34.0	19.6
40	150	14.7	70.8	40.9	19.6	81.7	47.1	18.1	43.5	25.1	19.6	40.8	23.6
60	225	14.7	70.8	40.9	19.6	81.7	47.1	18.1	43.5	25.1	19.6	40.8	23.6
80	300	14.7	70.8	40.9	19.6	81.7	47.1	18.1	43.5	25.1	19.6	40.8	23.6
100	375	14.7	70.8	40.9	19.6	81.7	47.1	18.1	43.5	25.1	19.6	40.8	23.6

HIGH WATTAGE

		208V			240V			415V			480V		
			AMPS	AMPS		AMPS	AMPS		AMPS	AMPS		AMPS	AMPS
GALS.	LITERS	KW	1PH	3PH	KW	1PH	3PH	KW	1PH	3PH	KW	1 PH	3PH
25	100	14.7	70.8	40.9	19.6	81.7	47.1	18.1	43.5	25.1	19.6	40.8	23.6
30	115	19.6	NA	54.5	26.1	NA	62.9	24.1	58.0	33.5	26.1	54.4	31.4
40	150	24.5	NA	68.1	32.7	NA	78.6	30.1	72.5	41.8	32.7	68.1	39.3
60	225	29.4	NA	81.7	39.2	NA	94.3	36.2	87.0	50.2	39.2	81.7	47.1
80	300	29.4	NA	81.7	39.2	NA	94.3	36.2	87.0	50.2	39.2	81.7	47.1
100	375	29.4	NA	81.7	39.2	NA	94.3	36.2	87.0	50.2	39.2	81.7	47.1

Consult factory for other voltages.

- CAPACITIES:
  (in 8 oz. servings, other sizes may be calculated)
  - 25 Gallon / 100 liters .....400 servings
  - 30 Gallon / 110 liters .....480 servings
  - 40 Gallon / 150 liters .....640 servings
  - 60 Gallon / 225 liters .....960 servings
  - 80 Gallon / 300 liters .....1280 servings
  - 100 Gallon / 375 liters .....1600 servings

CLEARANCE

RIGHT = 0
LEFT = 0
REAR = 0

Allow 12" minimum on right side for servicing.

SHIPPING WEIGHT (LBS.)

KEL-25 = 230
KEL-30 = 264
KEL-40 = 289
KEL-60 = 361
KEL-80 = 400
KEL-100 = 430

WATER Ⓗ Ⓒ

⅜" O.D. copper tube or ½" N.P.T. pipe.

When ordered with optional faucet.

NOTES:
Cleveland Range reserves right of design improvement or modification, as warranted.
Many regional, state and local codes exist and it is the responsibility of the owner and installer to comply with the codes.
Cleveland Range equipment is built to comply with applicable standards for manufacturers. Included among those approval agencies are U.L., NSF, CGA, CSA, ETL and others.

(NOT TO SCALE)
SECT. VIII PAGE 14
0609
Litho in U.S.A.

Item # _____ C.S.I. Section 11420

STEAM

VULCAN

EL & ET SERIES
ELECTRIC FULLY JACKETED KETTLE

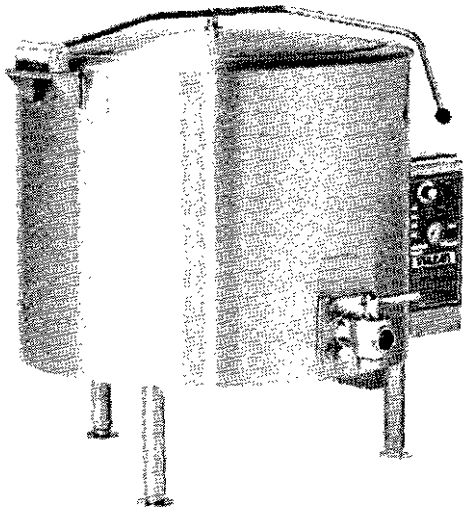

Model EL80

LISTED

☐	**EL80**	80 gallons	303 liters
☐	**ET100**	100 gallons	379 liters
☐	**ET125**	125 gallons	473 liters
☐	**ET150**	150 gallons	568 liters

STANDARD FEATURES

- Kettle fully steam jacketed.
- Mounted on stainless steel 2" diameter legs with adjustable flange feet.
- Spring assist hinged stainless steel cover with condensate ring and drop down lift handle.
- Kettle interior bottom sloped to front for smooth product flow through a mounted, tapered, plug type food product draw-off valve of standard 2" diameter.
- Draw-off opening strainer.
- Graduated measuring rod.
- Faucet bracket.
- On/off switch with signal light and thermostat control. 15 PSI relief valve, magnetic conductor and electric heating elements, low water cut-off control and a pressure limit switch with pressure gauge.
- Available standard 208 volt, 3 phase, 50/60 Hz or 240 volt, 3 phase, 50/60 Hz.
- One year limited parts and labor warranty.

OPTIONS

- ☐ Three inch compression tangent draw-off valve with perforated strainer.
- ☐ Correction facility package.
  a. Security type fasteners with tack welds.
  b. Stainless steel step over draw-off valve with chain.
- ☐ 316 stainless steel jacket liner.
- ☐ Increase to 43.2 kW for 60 gallon models (3 phase only).
- ☐ 480 volt, 3 phase, 50/60 Hz.
- ☐ Second year extended limited parts and labor warranty.

ACCESSORIES (Packaged & Sold Separately)

- ☐ Perforated stainless steel triple basket assembly.
- ☐ Clean-up kit, includes draw-off brush, clean-up brush and paddle scrapper with 40" handle.
- ☐ Stainless steel 48" whip.
- ☐ Heat deflector shield.
- ☐ (12") (18" double jointed) single pantry lead-free faucet.
- ☐ (12") (18" double jointed) double pantry lead-free faucet.
- ☐ Double pantry washdown hose with 16" add-on lead-free faucet with vacuum breaker.
- ☐ Double pantry washdown hose lead-free with vacuum breaker.
- ☐ Double pantry pot filler lead-free with vacuum breaker.

SPECIFICATIONS

Electric fully jacketed stationary kettle, Vulcan Model No. _____. Kettle is mounted on 2" diameter legs with adjustable flanged feet. Spring assist hinged stainless steel cover with condensate ring and drop down lift handle. The dish shaped interior bottom is sloped to the front for a smooth product flow through a mounted, tapered, 2" plug type food product draw-off valve. Draw-off includes opening strainer. Graduated measuring rod. Furnished standard with a 15 PSI relief valve, magnetic conductor and electric heating elements, on/off switch with signal light and thermostat control, low water cut-off control and a pressure limit switch and pressure gauge. Power supply to be (208) (240) volt, 3 ph, 50/60 Hz standard.

UL listed. Classified by UL to NSF std. #4. Meets ASME code.

VULCAN
a division of ITW Food Equipment Group LLC
P.O. Box 696 ■ Louisville, KY 40201 ■ Toll-free: 1-800-814-2028 ■ Local: 502-778-2791 ■ Quote & Order Fax: 1-800-444-0602

STEAM

EL & ET SERIES
ELECTRIC FULLY JACKETED KETTLE

NOTE:

- Dimensions which locate the above connections have a tolerance of + or -3" (+ or -75 mm).
- Installation of backflow preventers, vacuum breakers and other specific code requirements is the responsibility of the owner and installer. It is the responsibility of the owner and installer to comply with local codes.
- Plastic drains are not recommended due to inherent limited temperatures of the plastic. Boiler purge temperatures may exceed 180°F. The installer may be required to provide means to reduce boiler purge water temperature to be that of the condensate temperature of 140°F or less.
- This appliance is manufactured for commercial installation only and is not intended for home use.

BRIMFUL CAPACITIES:				
MODEL	GALLONS	QUARTS	LITERS	4 OZ. SVGS.
EL80	80	320	303	2560
ET100	100	400	379	3200
ET125	125	500	473	4000
ET150	150	600	568	4800

POWER			
VOLT	PH	36	43.2
208	3	100	120
240	3	86.6	104
480	3	43.2	52

SERVICE CONNECTIONS:

C2 **Water:** Faucet location.

1 Add 2" to "C" & "D" for 3" compression tangent draw-off valve.

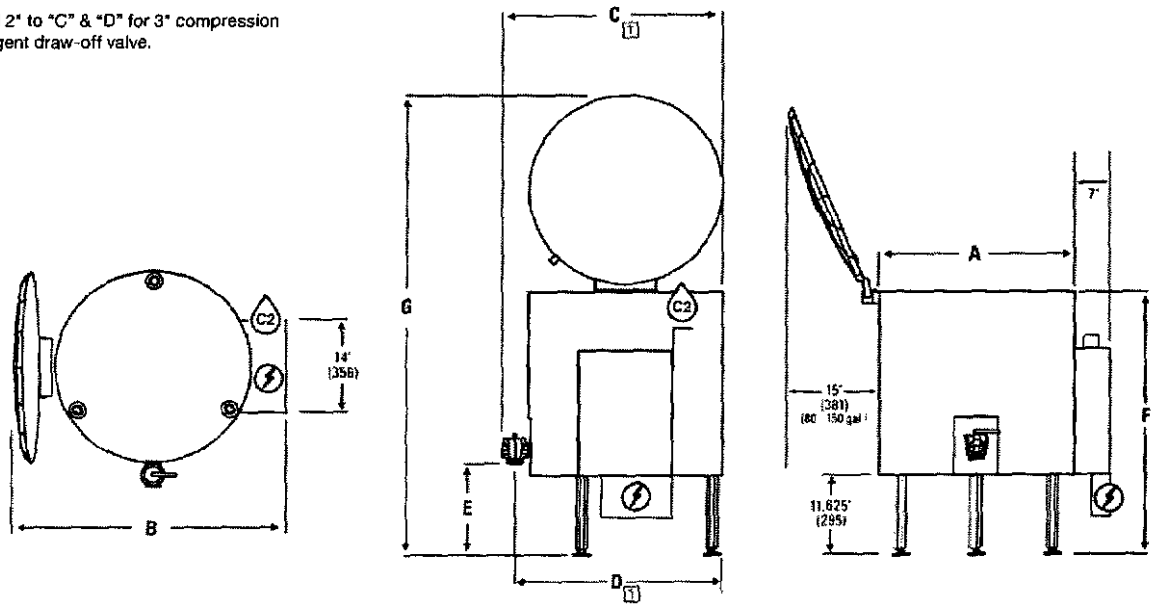

MODEL	CAPACITY	KW	A	B	C	D	E	F	G	H	I
EL80	80 gallons 303 liters	36	36½ (927)	58½ (1486)	41½ (1054)	39½ (1003)	13 (330)	40 (1016)	79 (2007)	20¾ (527)	22½ (572)
ET100	100 gallons 379 liters	36	36½ (927)	58½ (1486)	41½ (1054)	39½ (1003)	13 (330)	45 (1143)	84 (2134)	20¾ (527)	22½ (572)
ET125	125 gallons 473 liters	36	36½ (927)	58½ (1486)	41½ (1054)	39½ (1003)	13 (330)	52 (1321)	91 (2311)	20¾ (527)	22½ (572)
ET150	150 gallons 568 liters	36	36½ (927)	58½ (1486)	41½ (1054)	39½ (1003)	13 (330)	58½ (1486)	97½ (2477)	20¾ (527)	22½ (572)

VULCAN
a division of ITW Food Equipment Group LLC
P.O. Box 696 ■ Louisville, KY 40201 ■ Toll-free: 1-800-814-2028 ■ Local: 502-778-2791 ■ Quote & Order Fax: 1-800-444-0602

NOTE: In line with its policy to continually improve its products, Vulcan reserves the right to change materials and specifications without notice.

VULCAN

OPERATING DATA
FULLY STEAM JACKETED GAS KETTLES

OPERATING DATA — GAS FIRED KETTLES

MODEL NO.	GALLONS OF WATER		BURNER INPUT BTU/HOUR	HEAT UP TIME — MINUTES	
	WORKING CAPACITY	BOILER CHARGE		*EMPTY TO 5 PSI	#LOADED 130°F RISE
GL40E	33	13	105,000	24	65
GS60E	48	21	135,000	29	77
GL80E	68	21	135,000	29	99
GT100E	88	21	135,000	30	116
GT125E	113	21	135,000	32	141
GT150E	138	21	135,000	34	167

* Empty kettle at room temperature, cover closed, heated at 5 PSI, gauge pressure.
\# Kettle loaded with water to 3" below the rim (working capacity), with cover closed, with both kettle and water load at room temperature, time to raise the temperature of the water load 130°F.

ELECTRIC STEAM TRI-LEG KETTLE

Job _____ Item# _____

MODEL	kW	CAPACITY	
KELS-20	12	20 Gallon	76 Liter
KELS-30	15	30 Gallon	114 Liter
KELS-40	18	40 Gallon	152 Liter
KELS-60	18	60 Gallon	227 Liter
KELS-80	18	80 Gallon	303 Liter
KELS-100	24	100 Gallon	379 Liter

OPERATION SHALL BE BY:

Electrically, self-generating closed steam system equipped for operation on:

- ❑ 208 VAC, 1 Phase, 50/60 Hz. (20 and 30 gallon only)
- ❑ 208 VAC, 3 Phase, 50/60 Hz.
- ❑ 240 VAC, 1 Phase, 50/60 Hz. (20 and 30 gallon only)
- ❑ 240 VAC, 3 Phase, 50/60 Hz.

OPTIONAL ITEMS AT EXTRA COST:

- ❑ Type 316 stainless steel liner (60, 80 and 100 gallon models)
- ❑ 3" *(76 mm)* draw-off valve (TVT-3)
- ❑ 2" *(50 mm)* dairy valve (DDO-2T)
- ❑ 3" *(76 mm)* dairy valve (DDO-3T)
- ❑ 24 kw on 40, 60, 80 gallon
- ❑ 33 kw on 60, 80, 100 gallon
- ❑ 220 VAC, 1 Phase, 50/60 Hz (20 and 30 gallon only)
- ❑ 220 VAC, 3 Phase, 50/60 Hz.
- ❑ 380 VAC, 3 Phase, 50/60 Hz.
- ❑ 415 VAC, 3 Phase, 50/60 Hz.
- ❑ 480 VAC, 3 Phase, 50/60 Hz.
- ❑ 600 VAC, 3 Phase, 50/60 Hz.
- ❑ 380/220 VAC, 3 Phase, 50/60 Hz. 4 wire
- ❑ 415/240 VAC, 3 Phase, 50/60 Hz. 4 wire
- ❑ Spring assist hinged cover for 20, 30 or 40 gallon models (CH-)
- ❑ Two piece hinged stainless steel cover (2PHC-)
- ❑ Etched gallon markings (GM-)
- ❑ Etched litre markings(LM-)
- ❑ Correctional package

ACCESSORIES:

- ❑ Single pantry faucet with swing spout (SF-18)
- ❑ Double pantry faucet with swing spout (DF-18)
- ❑ One piece lift off cover (C-)
- ❑ Triple basket assembly (TBA-)
- ❑ Perforated strainer for draw-off valve (TPS-)
- ❑ Solid stainless steel disc for draw-off valve (TSS-)
- ❑ Graduated measuring strip (CMS-)
- ❑ Strainer hook (SH)
- ❑ Draw-off valve hose kit (DVHK-2)
- ❑ Calibrated thermostat dial "F"
- ❑ Calibrated thermostat dial "C"

SPECIFICATIONS:

*Shall be a Southbend Model*_____, self-generating, electric, tri-leg kettle, ASME Code stamped, National Board Registered, c-CSA-us and NSF certified. A double wall kettle interior shall form a steam jacket around the lower 2/3 of the kettle. The jacket enclosure shall contain distilled water which is factory sealed. The bottom of the kettle shall be of hemispherical design for superior heat circulation. Kettle will be mounted on 3 stainless steel tubular legs fitted with a 4-hole adjustable foot for securing unit to the floor.

Construction shall be all welded #4 finish stainless steel type 304. The liner on the 20, 30 and 40 gallon models shall be standard 316 for high acid content cooking. The controls shall be integrally mounted and shall include a power switch, thermostat, pilot light, low water light, vacuum/pressure gauge, safety valve, and low water shut off.

The kettle shall be standard with removable elements. The 20, 30 and 40 gallon models are supplied with a hinged, counter-balanced, stainless steel, domed cover. The 60, 80 and 100 gallon models are supplied with a spring-assist, hinged, stainless steel, domed cover. The kettle shall include a 2" (50 mm) draw-off valve.

The kettle shall operate in a temperature range of 165°F to 285°F *(74°C to 140°C)* at a maximum pressure of 50 psi *(345kPa)*.

Models: ☐ KELS-20 ☐ KELS-30 ☐ KELS-40 ☐ KELS-60 ☐ KELS-80 ☐ KELS-100

Model	Shipping Weight	Minimum Clearance	
KELS-20	196 lbs. [89 kg]	SIDES	3" [76 mm]
KELS-30	226 lbs. [103 kg]		
KELS-40	255 lbs. [116 kg]	BACK	3" [76 mm]
KELS-60	390 lbs. [177 kg]		
KELS-80	445 lbs. [202 kg]		
KELS-100	480 lbs. [218 kg]		

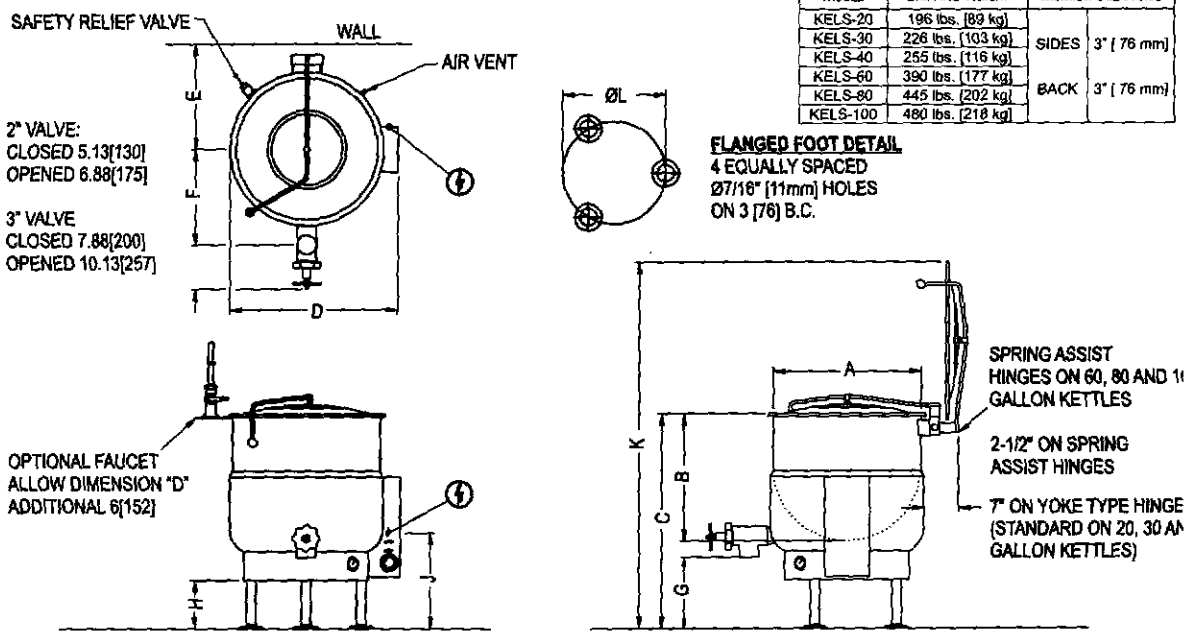

DIMENSIONS ARE IN INCHES [MM]

SERVICE CONNECTIONS

⏚ – ELECTRICAL CONNECTION : *to be specified on data plate*

DIMENSIONS

Model	Capacity	Units	A	B	C	D	E	F(2")	F(3")	G(2")	G(3")	H	J	K	L
KELS-20	20 gallons (76 liters)	in (mm)	21" (533)	18" (457)	38" (965)	23.75" (629)	18.5" (470)	14.75" (375)	15.5" (394)	18" (457)	17.5" (445)	14" (356)	21" (533)	60.5" (1537)	16.75" (425)
KELS-30	30 gallons (114 liters)	in (mm)	24" (610)	20" (508)	38" (965)	27.75" (705)	20" (508)	16" (406)	16.5" (419)	15.75" (400)	15.25" (387)	12.5" (318)	19" (483)	63.5" (1613)	18.31" (465)
KELS-40	40 gallons (152 liters)	in (mm)	26" (660)	22.5" (572)	38" (965)	29.75" (756)	21" (533)	17" (432)	18" (457)	13.5" (343)	13" (330)	9" (229)	17" (432)	65" (1651)	19.94" (506)
KELS-60	60 gallons (227 liters)	in (mm)	29.5" (749)	26" (660)	42" (1067)	33.75" (857)	19" (483)	18" (457)	19.25" (489)	14" (356)	13.5" (343)	11" (280)	17.25" (438)	75" (1905)	23.13" (587)
KELS-80	80 gallons (303 liters)	in (mm)	33" (838)	28" (711)	45" (1143)	36.75" (933)	20.5" (521)	19.5" (495)	20.5" (521)	15" (381)	14.5" (368)	12.75" (324)	18" (458)	81" (2058)	26.25" (667)
KELS-100	100 gallons (379 liters)	in (mm)	35.5" (902)	30" (762)	48" (1219)	40" (1016)	22" (559)	21.5" (546)	22.5" (572)	15" (381)	14.5" (368)	13" (330)	20.5" (521)	87" (2210)	29.44" (748)

ELECTRICAL CHARACTERISTICS

Available kW		
Model	Standard	Optional
KELS-20	12	N/A
KELS-30	15	N/A
KELS-40	18	24
KELS-60	18	24 or 33
KELS-80	18	24 or 33
KELS-100	24	33

		Amps Per Line						
kW	Phase	208V	220V	240V	380V	415V	480V	600V
12	1	57.7	54.5	50.0	N/A	N/A	N/A	N/A
	3	33.3	31.5	28.9	18.2	16.7	14.4	11.6
15	1	72.1	68.2	62.5	N/A	N/A	N/A	N/A
	3	41.6	39.4	36.1	22.8	20.9	18.0	14.5
18	3	50.0	47.2	43.3	27.3	25.0	21.7	21.7
24	3	66.6	63.0	57.7	36.5	33.4	28.9	23.1
33	3	91.6	86.6	79.4	50.1	45.9	39.7	31.8

INTENDED FOR COMMERCIAL USE ONLY.
NOT FOR HOUSEHOLD USE.

SOUTHBEND
1100 Old Honeycutt Road, Fuquay-Varina, NC 27526
(919) 762-1000 www.southbendnc.com

Cleveland

ELECTRIC KETTLES

Project _____
Item _____
Quantity _____
FCSI Section _____
Approval _____
Date _____

TRI-LEG, ELECTRIC KETTLES

STATIONARY, "SPLASH PROOF SERIES", SELF-CONTAINED 2/3 STEAM JACKETED, 25, 40, 60, 80 or 100 GALLONS (100, 150, 225, 300, or 375 LITERS)

MODELS: ☐ KEL-25 ☐ KEL-60 ☐ KEL-30 ☐ KEL-80 ☐ KEL-40 ☐ KEL-100

Cleveland Standard Features

- Self-contained, easily installed - needs only an electrical hook-up
- Steam jacket filled with treated water, venting and/or refilling is not required
- Accurate, consistant solid state temperature controls (mechanical thermostate not as accurate) - less than ±1°C variance (ideal for simmering). Operating temperature range from 145° - 260°F (63°C - 127°C)
  Control panel includes:
  • LED indicator for heat cycle • LED indicator for low water
  • Power ON/OFF switch • Adjustable temperature control dial
- Water resistant controls, splash-proof construction
- Re-inforced rolled rim design prevents damage to kettle rim, eliminates "bar rim designs"
- Welded-in heating elements, (holds vacuum better, won't leak or loose water)
- Easily cleaned: kettle and all exterior surfaces are of type 304 stainless steel with an #4 finish
- Rear mounted easy access pressure gauge and pressure relief valve to prevent tampering. Color coded easy to read pressure gauge with "green" and "vent air zone"
- 50 psi steam jacket rating for higher cooking temperatures
- 50 psi safety valve
- Solid state water level control (no sight glass gauge to break or leak)
- Splash proof element cover with a double gasket seal
- Faucet mounting bracket
- 2" diameter tangent draw-off valve with drain strainer
- 1 5/8" O.D. tri-leg supports with level adjustable feet for floor bolting
- Spring-assisted, hinged, rotatable, domed stainless steel cover
- Standard voltage is 208-240 volts, 60 Hz, 3-phase, 3-wire
- Typical approvals include UL., CSA, CE, NSF and ASME

Options & Accessories

- ☐ Hot and Cold Water Faucet with Swing Spout (DPK)
- ☐ Type 316 Stainless Steel Kettle Liner for high acid food products (316)
- ☐ Cooking Baskets and Tri-Basket Supports (BS and TBS)
- ☐ Kettle Accessory Kit (KAK) includes:
  - ☐ Clean-up Brush (CB)
  - ☐ 36" Kettle Whip (KW)
  - ☐ Draw-off Brush (DB)
  - ☐ 36" Kettle Paddle (KP)
  - ☐ 36" Kettle Brush (KB)
  - ☐ 24 oz. Ladle (KL)
- ☐ Automatic Water Meter (GMF or LMF)
- ☐ Water Meter Stand (SWM)
- ☐ Lift-off Covers (CL)
- ☐ Drain Strainers (DS-)
- ☐ Measuring Strip (MS)
- ☐ Kettle Markings (KM)

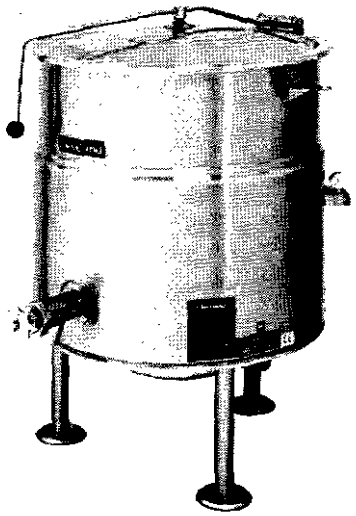

Short Form Specifications

Shall be CLEVELAND, Electric Kettle, Tri-leg mounted, self-contained, stationary, Model KEL - ____ gallons, 2/3 Steam Jacketed. Type 304 Stainless Steel Kettle and Supports. Rated 50 psi with Safety Valve; Permanently filled Steam Jacket. Spring-assisted Domed Cover. (Provide 1.50" Freeboard above batches of rated size.) Splash Proof Solid State Temperature (± 1° C) and Safety Control System in plug-in Module including L.E.D. indicators. Base Mounted for Floor Bolting with three (3), tri-bolt flanges. 2" diameter Tangent Draw-off Valve.

- ☐ Hot and cold or cold only Kettle Filler with 60" Hose (DKF-K or SKF-K)
- ☐ Swing Funnels for drain (SF)
- ☐ Alternate Mounting Systems
- ☐ High Wattages and Special Voltages
- ☐ 3" diameter Tangent Draw-Off Valve w/Strainer (TD3)
- ☐ Heat Deflector Shield (HS001)
- ☐ Correctional Packages
- ☐ Insulated Outer Jacket (IOJ)

1333 East 179 St., Cleveland, Ohio, U.S.A. 44110
Tel: 1-216-481-4900 Fax: 1-216-481-3782
Web Site: www.ClevelandRange.com Email: Steam@ClevelandRange.com
Manitowoc

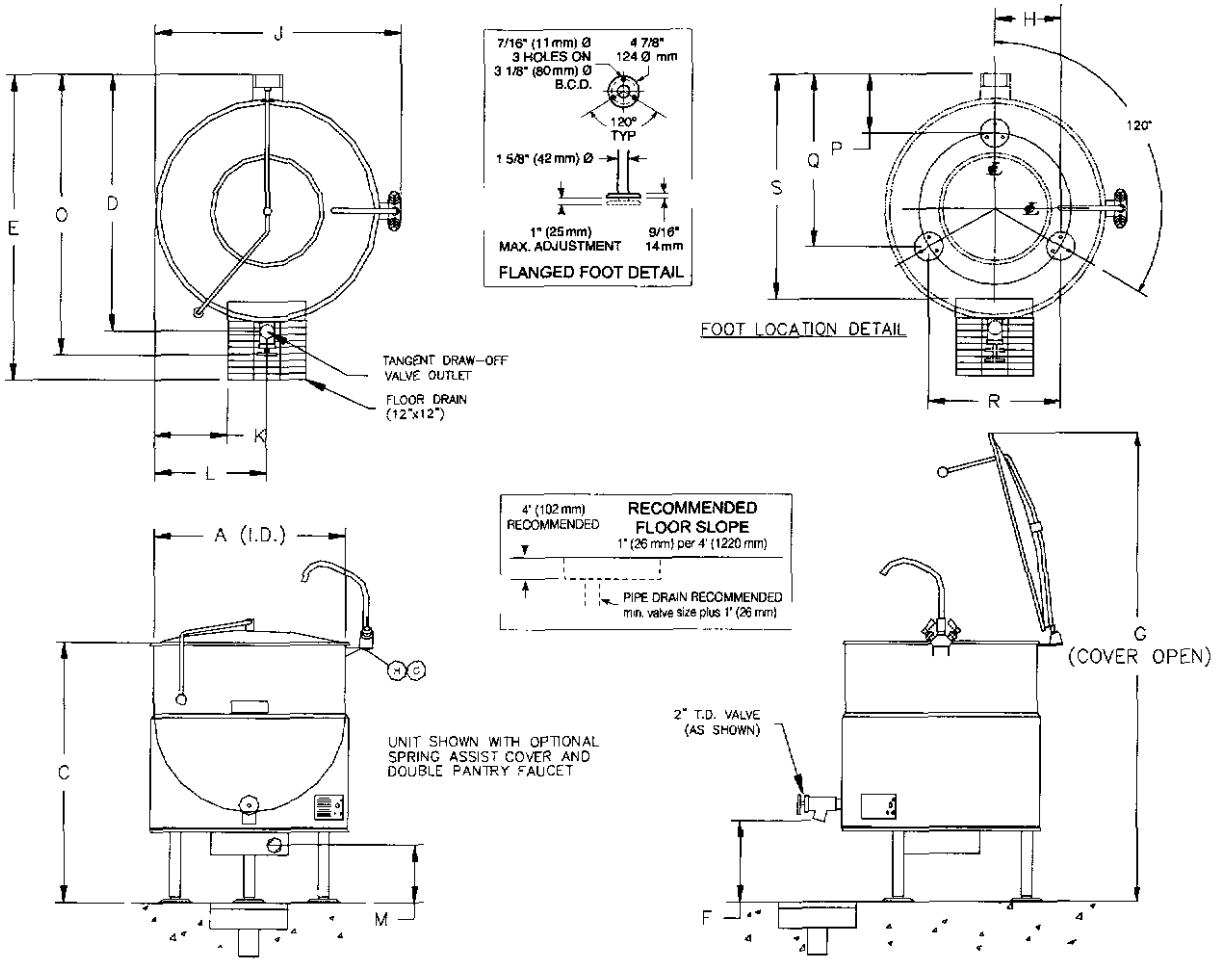

DIMENSIONS

GALS./ LITERS		A	C	D	E	F	G	H	J	K	L	M	N	O	P	Q	R	S
25/	IN	21	36 3/4	21 7/8	34	13 7/8	60 3/4	17 7/8	29 7/8	5 1/4	11 1/4	9 3/4	7 1/2	26 3/4	4 5/8	20	15 1/2	22 3/8
100	mm	534	934	556	864	353	1544	455	759	134	286	248	191	680	118	508	394	569
30/	IN	24	38	24 7/8	37	15 5/8	65 1/4	20 7/8	28 3/4	6 3/4	12 3/4	11 1/2	9 1/4	29 3/4	4 5/8	20 1/4	18 1/8	25 3/8
115	mm	610	966	632	940	397	1658	531	731	172	324	299	293	756	118	515	461	645
40/	IN	26	40	29 1/8	40	15 1/8	69 1/2	22 7/8	30 3/4	7 3/4	13 3/4	11	8 3/4	34	4 5/8	21 3/4	19 7/8	28 5/8
150	mm	661	1016	740	1016	385	1766	582	782	197	350	280	223	864	118	553	505	728
60/	IN	29 1/2	43	33	44	14 5/8	75 3/4	26 3/8	34 1/4	9 1/2	15 1/2	10 1/2	8 1/4	37 7/8	5 1/8	27 1/2	22 7/8	32 1/2
225	mm	750	1093	838	1118	372	1925	670	870	242	394	267	210	963	131	699	582	826
80/	IN	33	43 1/2	36 5/8	47	13	79 1/2	29 7/8	37 3/4	11 1/4	17 1/4	9	6 3/4	41 1/2	5 1/8	29 3/8	25 7/8	35 7/8
300	mm	839	1105	931	1194	331	2020	759	959	286	439	229	172	1055	131	747	658	912
100/	IN	35 1/2	45	39 1/4	50	12 1/2	83 3/8	32 3/8	40 1/4	12 1/2	18 1/2	8 1/2	6 1/4	44 1/8	5 1/8	5 1/8	28	38 3/8
375	mm	902	1144	997	1270	318	2118	823	1023	318	470	216	159	1121	131	131	712	975

STANDARD WATTAGE

		208V			240V			415V			480V		
			AMPS	AMPS		AMPS	AMPS		AMPS	AMPS		AMPS	AMPS
GALS.	LITERS	KW	1PH	3PH	KW	1PH	3PH	KW	1PH	3PH	KW	1 PH	3PH
25	100	9.8	47.2	27.2	13.1	54.4	31.4	12.1	29.0	16.7	13.1	27.2	15.7
30	115	12.3	59.0	34.1	16.3	68.1	39.3	15.1	36.2	20.9	16.3	34.0	19.6
40	150	14.7	70.8	40.9	19.6	81.7	47.1	18.1	43.5	25.1	19.6	40.8	23.6
60	225	14.7	70.8	40.9	19.6	81.7	47.1	18.1	43.5	25.1	19.6	40.8	23.6
80	300	14.7	70.8	40.9	19.6	81.7	47.1	18.1	43.5	25.1	19.6	40.8	23.6
100	375	14.7	70.8	40.9	19.6	81.7	47.1	18.1	43.5	25.1	19.6	40.8	23.6

HIGH WATTAGE

		208V			240V			415V			480V		
			AMPS	AMPS		AMPS	AMPS		AMPS	AMPS		AMPS	AMPS
GALS.	LITERS	KW	1PH	3PH	KW	1PH	3PH	KW	1PH	3PH	KW	1 PH	3PH
25	100	14.7	70.8	40.9	19.6	81.7	47.1	18.1	43.5	25.1	19.6	40.8	23.6
30	115	19.6	NA	54.5	26.1	NA	62.9	24.1	58.0	33.5	26.1	54.4	31.4
40	150	24.5	NA	68.1	32.7	NA	78.6	30.1	72.5	41.8	32.7	68.1	39.3
60	225	29.4	NA	81.7	39.2	NA	94.3	36.2	87.0	50.2	39.2	81.7	47.1
80	300	29.4	NA	81.7	39.2	NA	94.3	36.2	87.0	50.2	39.2	81.7	47.1
100	375	29.4	NA	81.7	39.2	NA	94.3	36.2	87.0	50.2	39.2	81.7	47.1

Consult factory for other voltages.

- CAPACITIES:
  (in 8 oz. servings, other sizes may be calculated)
  - 25 Gallon / 100 liters .....400 servings
  - 30 Gallon / 110 liters .....480 servings
  - 40 Gallon / 150 liters .....640 servings
  - 60 Gallon / 225 liters .....960 servings
  - 80 Gallon / 300 liters .....1280 servings
  - 100 Gallon / 375 liters .....1600 servings

CLEARANCE

RIGHT = 0
LEFT = 0
REAR = 0

Allow 12" minimum on right side for servicing.

SHIPPING WEIGHT (LBS.)

KEL-25 = 230
KEL-30 = 264
KEL-40 = 289
KEL-60 = 361
KEL-80 = 400
KEL-100 = 430

WATER (H)(C)

¾" O.D. copper tube or ½" N.P.T. pipe.

When ordered with optional faucet.

NOTES:
Cleveland Range reserves right of design improvement or modification, as warranted.
Many regional, state and local codes exist and it is the responsibility of the owner and installer to comply with the codes.
Cleveland Range equipment is built to comply with applicable standards for manufacturers, included among those approval agencies are U.L., NSF, CGA, CSA, ETL and others.

(NOT TO SCALE)
SECT. VIII PAGE 14
0609
Litho in U.S.A.

Gas Steam Tilting Kettle

Job _____ Item# _____

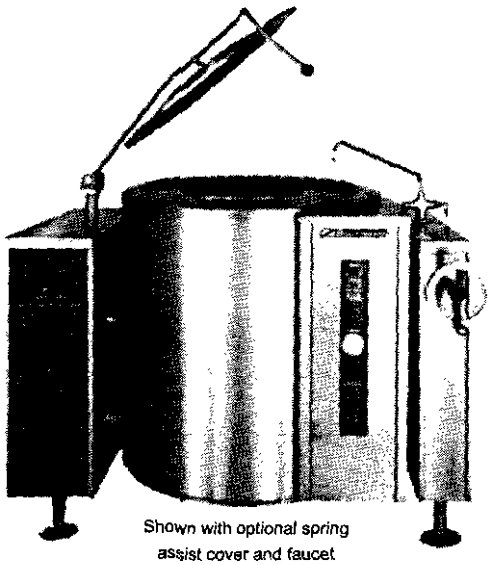

Shown with optional spring assist cover and faucet

Model	Capacity	
KTLG-20	20 Gallon	76 Liter
KTLG-30	30 Gallon	114 Liter
KTLG-40	40 Gallon	152 Liter
KTLG-60	60 Gallon	227 Liter

SPECIFICATIONS:

Shall be a Southbend Model _____, self-contained, gas fired, fully insulated steam jacketed kettle, ASME Code stamped, National Board Registered, AGA, CGA and NSF certified for operation up to 50 PSI. A double wall interior shall form a steam jacket around the lower 2/3 of the kettle. The jacket enclosure shall contain factory sealed, distilled water. The kettle interior on models 20, 30 and 40 gallon models shall be stainless stell, type 316 for high acid content cooking. The kettle interior on 60 gallon models shall be type 304 stainless steel. Kettle exterior is fully insulated. The bottom of the kettle shall be of hemispherical design for superior heat circulation. The recessed control panel is located on the front right of the unit, in full view of the operator and easy to use. Standard controls include direct immersion thermostat for operation at a temperature range of 165°F to 275°F (74°C to 135°C) at 50 psi, water sight glass, cooking light, pressure gauge and electronic ignition with ignition indicator light. Safety features include low water shut off with indicator light, pressure switch, pressure relief valve and a 100% safety gas shut off valve.

The kettle shall pivot on trunnions connected to the tilt mechanism and control consoles. The tilt mechanism shall allow the kettle to tilt past 90° for complete emptying. The console shall be drip proof, stainless steel clad and shall be supported on all welded, 1-5/8" *(41 mm)* diameter stainless steel legs with flanged feet for securing to the floor.

OPERATION SHALL BE BY:

High efficiency power burner system for operation on 115 VAC, 1 Phase, 50/60 Hz.

- ☐ Natural gas
- ☐ L.P. gas

OPTIONAL ITEMS AT EXTRA COST:

- ☐ Type 316 stainless steel liner (for KTLG-60 only)
- ☐ 208-240 VAC operation (specify voltage)
- ☐ Spring assist stainless steel cover (CH-)
- ☐ 2" (50 mm) tangent draw-off valve (TVT-2)
- ☐ 3" (76 mm) tangent draw-off valve (TVT-3)
- ☐ 2" (50 mm) dairy draw-off valve (DDO-2T)
- ☐ 3" (76 mm) dairy draw-off valve (DDO-3T)
- ☐ Etched gallon markings (GM-)
- ☐ Etched litre markings (LM-)
- ☐ Single pantry faucet with swing spout (SF-18)
- ☐ Double pantry faucet with swing spout (DF-18)
- ☐ Casters
- ☐ Correctional package

ACCESSORIES:

- ☐ Triple basket assembly (TBA-)
- ☐ Graduated measuring strip (CMS-)
- ☐ Perforated strainer for draw-off valve (TPS-)
- ☐ Solid stainless steel disc for draw off (TSS-)
- ☐ Strainer hook (SH-)
- ☐ Pour strainer (TKS-)
- ☐ Pan carrier
- ☐ Draw-off valve hose kit (DVHK-)

Models: ☐ **KTLG-20** ☐ **KTLG-30** ☐ **KTLG-40** ☐ **KTLG-60**

Model	Shipping Weight
KTLG-20	700 lbs. [318 kg]
KTLG-30	900 lbs. [408 kg]
KTLG-40	930 lbs. [422 kg]
KTLG-60	1142 lbs. [51 kg]

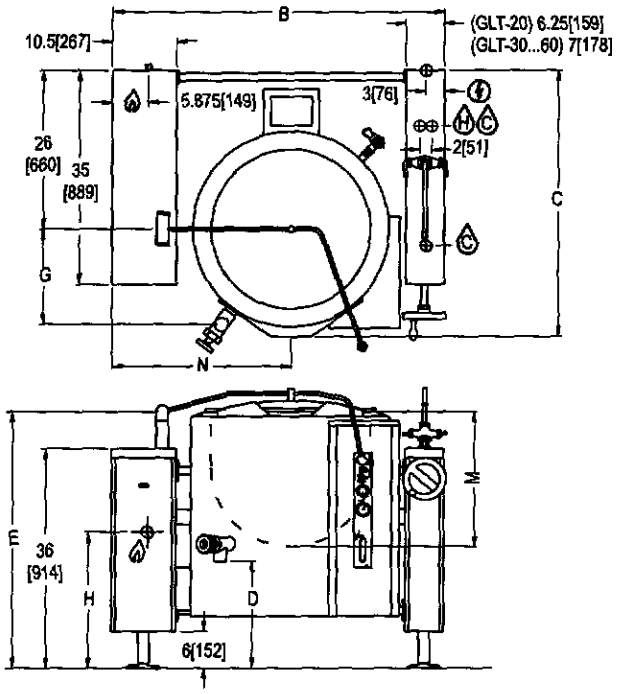

DIMENSIONS ARE IN INCHES [MM]

FLANGED FOOT DETAIL
2 EQUALLY SPACED
Ø7/16" [11mm] HOLES
ON 2.5 [63] B.C.

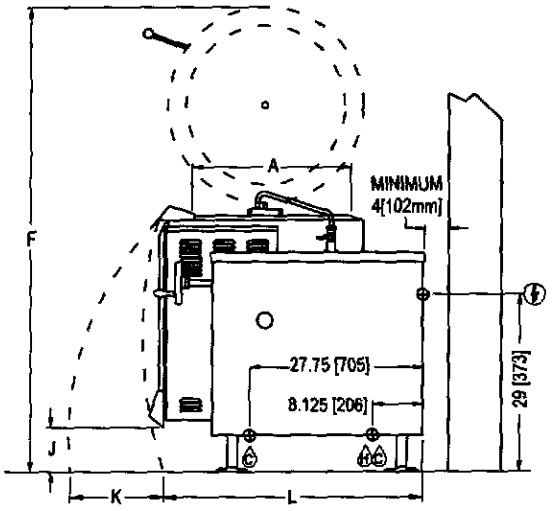

SERVICE CONNECTIONS

- GAS CONNECTION: Supply Gas through 3/4" pipe. A gas shut off valve must be installed in supply piping convenient and adjacent to appliance.
- ELECTRICAL CONNECTION : Unless otherwise specified, field wire electrical connection to be 120 volts, 60 Hz, 1 phase with grounding wire. Unit furnished with 6' cord and 3 prong plug. Total maximum amps 4.0.
- COLD WATER: 3/8" (10 mm) tubing to faucet (optional)
- HOT WATER: 3/8" (10 mm) tubing to faucet (optional)

DIMENSIONS

Model	Capacity	Units	A	B	C	D	E	F	G	H	J	K	L	M	N
KTLG-20	20 gallons (76 liters)	in (mm)	20" (508)	48.13" (1222)	40.63" (1032)	19" (483)	40.13" (1019)	76.5" (1943)	16.5" (419)	24" (610)	11" (279)	22" (559)	40.5" (1029)	18.38" (467)	25.5" (648)
KTLG-30	30 gallons (114 liters)	in (mm)	26" (660)	55.25" (1403)	43.63" (1108)	16.5" (419)	39" (991)	73.75" (1873)	15.5" (394)	22.25" (565)	7.5" (191)	21" (538)	38.13" (968)	17.88" (454)	28.5" (724)
KTLG-40	40 gallons (152 liters)	in (mm)	26" (660)	55.25" (1403)	43.63" (1108)	16.5" (419)	43.25" (1099)	76" (1930)	15.5 (394)	22.25" (565)	7.5" (191)	23" (584)	42.5" (1080)	22.13" (562)	28.5" (724)
KTLG-60	60 gallons (227 liters)	in (mm)	30" (762)	59" (1499)	45.63" (1159)	17.88" (454)	43.88" (1115)	82" (2083)	19.5" (495)	22.25" (565)	5.5" (140)	23" (584)	45.5" (1156)	24.75" (629)	30.5" (775)

UTILITIES

Model	Gas Supply				Minimum Clearance *	
	BTU/HR.	kW/HR.	Supply Pipe Pressure (W.C.)			
KTLG-20	80,000	23.4	Natural 6"-14" (152-356 mm)	Propane 11"-14" (279-356 mm)	Sides Back	0" [0 mm] 4" [102 mm]
KTLG-30	100,000	29.3				
KTLG-40	100,000	29.3				
KTLG-60	120,000	35.2				

* For use on non-combustible floors only.

INTENDED FOR COMMERCIAL USE ONLY.
NOT FOR HOUSEHOLD USE.

SOUTHBEND
1100 Old Honeycutt Road, Fuquay-Varina, NC 27526
(919) 762-1000 www.southbendnc.com

Cleveland

GAS KETTLES

Project _____
Item _____
Quantity _____
FCSI Section _____
Approval _____
Date _____

LEG TYPE, GAS-FIRED KETTLES

TILTING, 2/3 STEAM JACKETED
"SPLASH PROOF SERIES"
25 GALLONS (100 LITERS)

MODEL: ☐ *KGL-25-T*

Cleveland Standard Features

- Self-contained gas tilting kettle is easily installed, only needs a gas connection and a 115 volt outlet.
- Precise, consistent temperature control, less than 1ºC temperature variance (ideal for simmering). Operating temperature range from 145ºF-260ºF (63ºC-127ºC).
- "Splash-Proof" Solid-State Control Panel for temperature, Low Water Safety, and Power "On/Off" Switch. Accurate L.E.D. Indicators for Heat Cycle and Low Water Warning.
- Kettle and all exterior surfaces are a 304 Stainless Steel with a #4 finish.
- Energy efficient (65%), high performance gas-fired heating system for fast heat-up and recovery time:
- Twenty-five gallon model with 90,000 BTU firing rate and 58,500 BTU directly applied to the product.
- Supplied with Gas Pressure Regulator.
- Standard for natural gas operation.
- Large pouring lip for easier, faster, pouring. Heavy-duty Rolled Rim design provides strong reinforcement, prevents damages from abuse.
- "Splash-Proof" rear-mounted pressure/vacuum gauge.
- Steam jacket permanently filled with treated distilled water; venting and/or refilling is not required.
- 50 psi Steam Jacket Rating. Safety Valve mounted toward rear of kettle to avoid tampering.
- Automatic Electronic Spark Ignition System.
- Supplied with cord and plug for 115 volt controls.
- Tilt Mechanism of roller bearings and case hardened self-locking worm and segment gear.
- Support Legs with level adjustable feet, flanged for floor bolting.
- Typical approvals include AGA, CSA, CE, NSF and ASME.

Options & Accessories

- ☐ 316 Stainless Steel Liner (316)
- ☐ Propane Gas Option (LP)
- ☐ Kettle Markings (KM)
- ☐ Spring Assist Cover (CHS)
- ☐ Lift Off Cover (CL)
- ☐ Basket Strainer (BS and TBS)

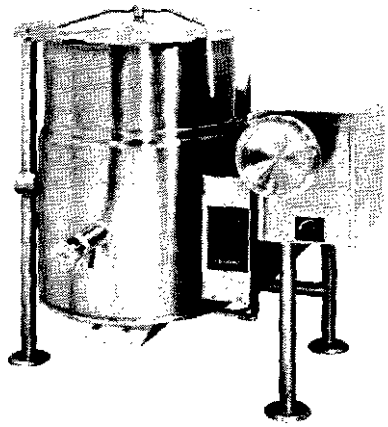

Shown with optional Spring Assisted Cover and 2" Tangent Draw-Off Valve

Short Form Specifications

Shall be CLEVELAND, Gas Kettle, self-contained, tilting, Model KGL-25-T, 25 gallons, natural or LP gas, 2/3 Steam Jacketed, Type 304 Stainless Steel and supports. Jacket rated at 50psi with Safety Valve. Complete with "Splash-Proof" Solid-State Water Level, Temperature, and Safety Low Water Power Cut-Off, including L.E.D. Indicators for Heat Cycle and Low Water Warning.

- ☐ Measuring Strip (MS)
- ☐ Food Strainer (FS)
- ☐ Hot and cold water faucet (DPK), or cold water (SPK). Requires faucet bracket (FBKT)
- ☐ 2" Tangent Draw-Off Valve (TD2)
- ☐ Kettle Accessory Kit (KAK) includes:
  - ☐ Clean-up Brush (CB)
  - ☐ 36˝ Kettle Paddle (KP)
  - ☐ 36˝ Kettle Whip (KW)
  - ☐ 36˝ Kettle Brush
  - ☐ Draw-Off Brush (DB)
  - ☐ 24 oz. Ladle (KL)
- ☐ Correctional Packages

1333 East 179 St., Cleveland, Ohio, U.S.A. 44110
Tel: 1-216-481-4900 Fax: 1-216-481-3782
Web Site: www.ClevelandRange.com Email: Steam@ClevelandRange.com
Manitowoc

- CAPACITIES: (in 4 oz. servings, other sizes may be calculated)
  25 gallons / 100 liters..... 426 servings

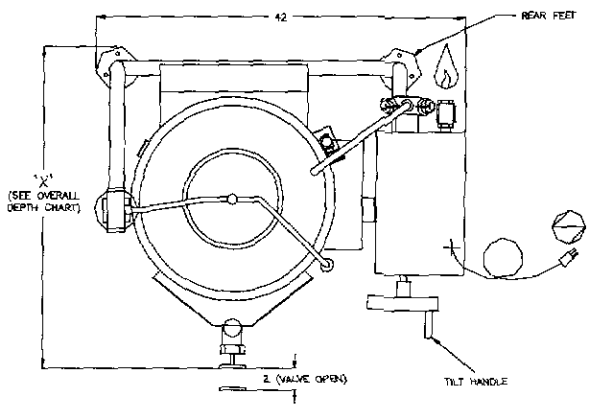

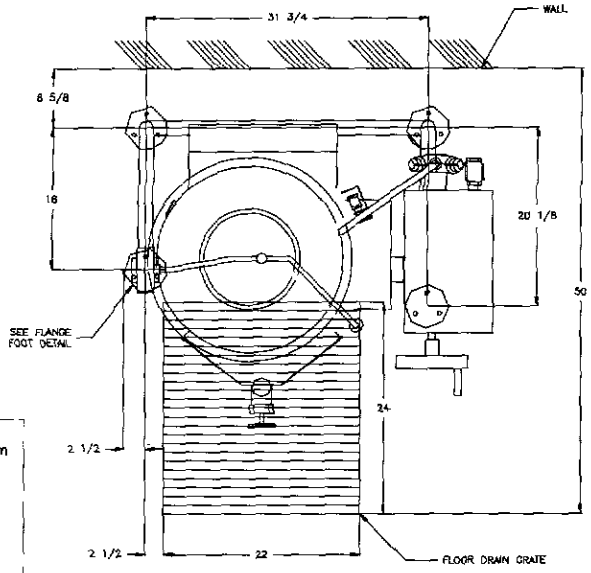

FOOT LOCATION & FLOOR DRAIN DETAIL

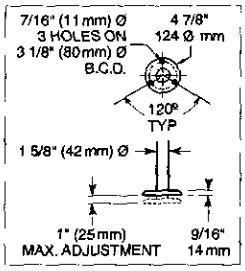

FLANGED FOOT DETAIL

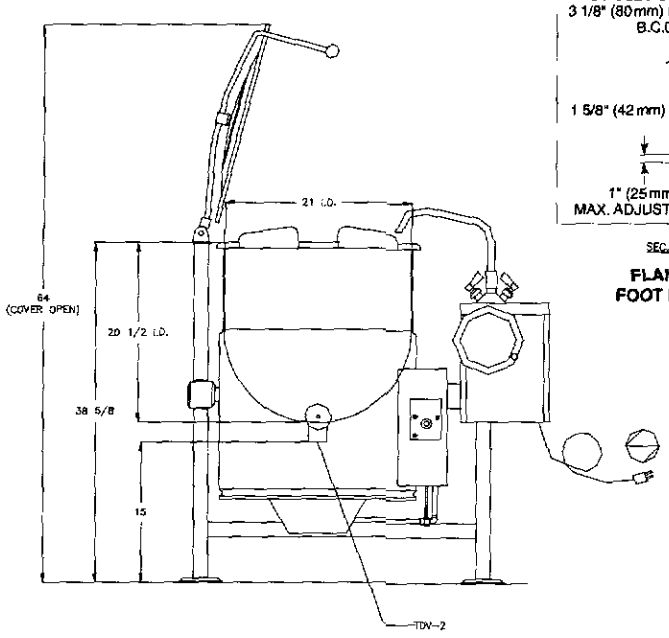

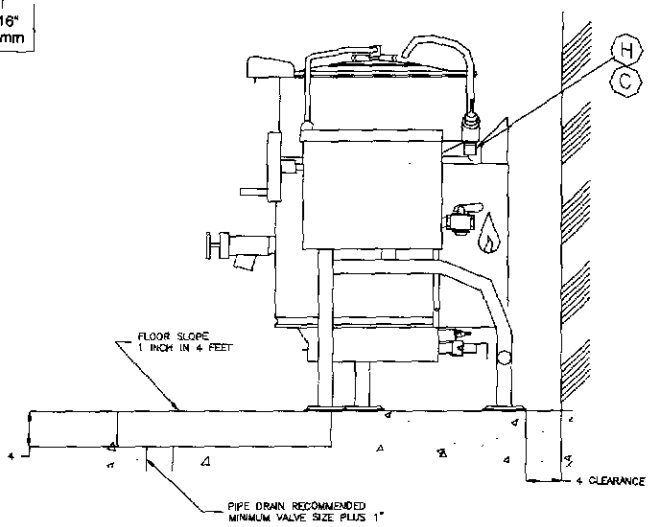

UNIT SHOWN WITH OPTIONAL TDV-2, SPRING ASSIST COVER AND DOUBLE PANTRY FAUCET.

NOTES

1. MANUFACTURER MUST BE NOTIFIED IF UNIT WILL BE OPERATING ABOVE 2,000 FOOT ALTITUDE.
2. CONSULT FACTORY FOR MANUFACTURED GAS.
3. ALL VERTICAL DIMENSIONS SHOWN ARE MINIMUM. FEET ARE ADJUSTABLE TO 1 INCH MAXIMUM.
4. UNIT COMES WITH 6' POWER CORD.

SPECIFICATIONS

MODEL	ELECTRICAL SUPPLY:				GAS SUPPLY:		(PIPING 3/4 NPT)			APPROVALS				CLEARANCE:	SHIPPING WEIGHT
	VOLTS	PHASE	AMPS	FREQ	TYPE	BTU RATING	WATER COLUMN	BTU PER CU. FT.	SUPPLY PRESSURE	AGA	CGA	CE MARK	NSF		
KGL-25-T	120	1	5	60	NAT	90,000	4.2	1000	4" TO 14" W.C.	✓	✓		✓	RIGHT: 0 inches LEFT: 0 inches REAR: 4 inches ALLOW 12" SPACE MINIMUM ON RIGHT SIDE FOR SERVICE	320 LBS.
	120	1	5	60	LP	90,000	10	2500	4" TO 14" W.C.	✓	✓		✓		
	220	1	3	60	NAT	90,000	4.2	1000	4" TO 14" W.C.				✓		
	220	1	3	60	LP	90,000	10	2500	4" TO 14" W.C.				✓		

OVERALL DEPTH

DESCRIPTION	DIM 'X'
KETTLE WITH TDV-2	37
KETTLE WITHOUT TDV-2 TILT HANDLE ON	32 1/2
FOR PASSING THROUGH NARROW DOORS	
*KETTLE WITH TDV-2 STEM & REAR FEET REMOVED	32 1/2
*KETTLE WITHOUT TDV-2	31 1/2
*KETTLE WITHOUT TDV-2 & REAR FEET REMOVED	30

* TILT HANDLE REMOVED

NOTES:
Cleveland Range reserves right of design improvement or modification, as warranted.
Many regional, state and local codes exist and it is the responsibility of the owner and installer to comply with the codes.
Installation of backflow preventers, vacuum breakers and other specific code requirements is the responsibility of the owner and installer.
Cleveland Range equipment is built to comply with applicable standards for manufacturers. Included among those approval agencies are U.L., A.G.A., NSF, ASME/N.Bd., CSA, CGA, ETL and others.

(NOT TO SCALE)
SECT. IX PAGE 4
0609
Litho in U.S.A.

Item # _____ C.S.I. Section 11420

STEAM

SL & ST SERIES
DIRECT STEAM FULLY JACKETED KETTLE

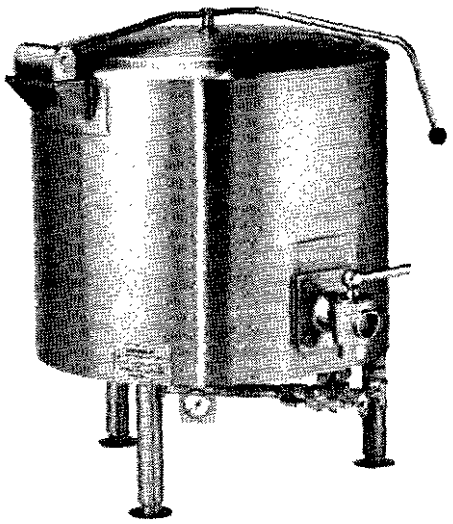

Model SL80

☐	**SL80**	80 gallons	303 liters
☐	**ST100**	100 gallons	379 liters
☐	**ST125**	125 gallons	473 liters
☐	**ST150**	150 gallons	568 liters

STANDARD FEATURES

- Kettle fully steam jacketed.
- Mounted on stainless steel 2" diameter legs with adjustable flange feet.
- Spring assist hinged stainless steel cover with condensate ring and drop down lift handle.
- Kettle interior bottom sloped to front for smooth product flow through a mounted, tapered, plug type food product draw-off valve of standard 2" diameter.
- Draw-off opening strainer.
- Graduated measuring rod.
- Faucet bracket.
- 15 PSI relief valve.
- Vacuum pressure relief valve.
- Main and simmer steam supply valve.
- Steam pressure gauge and thermostatic steam trap all mounted and interconnected ready for final connection.
- One year limited parts and labor warranty.

OPTIONS

- ☐ Three inch compression tangent draw-off valve with perforated strainer.
- ☐ Correction facility package.
  a. Security type fasteners with tack welds.
  b. Stainless steel step over draw-off valve with chain.
- ☐ 316 stainless steel jacket liner
- ☐ Second year extended limited parts and labor warranty.

ACCESSORIES (Packaged & Sold Separately)

- ☐ Perforated stainless steel triple basket assembly.
- ☐ Ball float trap.
- ☐ P.R.V. – Pressure reducing valve.
- ☐ Clean-up kit, includes draw-off brush, clean-up brush and paddle scrapper with 40" handle.
- ☐ Stainless steel 48" whip.
- ☐ Heat deflector shield.
- ☐ (12") (18" double jointed) single pantry lead-free faucet.
- ☐ (12") (18" double jointed) double pantry lead-free faucet.
- ☐ Double pantry washdown hose with 16" add-on lead-free faucet with vacuum breaker.
- ☐ Double pantry washdown hose lead-free with vacuum breaker.
- ☐ Double pantry pot filler lead-free with vacuum breaker.

SPECIFICATIONS

Direct steam fully jacketed stationary kettle, Vulcan Model No. _____. Kettle is mounted on 2" diameter legs with adjustable flanged feet. Spring assist hinged stainless steel cover with condensate ring and drop down lift handle. The dish shaped interior bottom is sloped to the front for a smooth product flow through a mounted, tapered, 2" plug type food product draw-off valve. Draw-off includes opening strainer. Graduated measuring rod. 15 PSI relief valve, vacuum relief valve, main and simmer steam supply valves. Steam pressure gauge and thermostatic steam trap all mounted and interconnected ready for final connections.

UL listed. Classified by UL to NSF Std. #4. Meets ASME code.

VULCAN
a division of ITW Food Equipment Group LLC
P.O. Box 696 ■ Louisville, KY 40201 ■ Toll-free: 1-800-814-2028 ■ Local: 502-778-2791 ■ Quote & Order Fax: 1-800-444-0602

STEAM

SL & ST SERIES
DIRECT STEAM FULLY JACKETED KETTLE

DIRECT STEAM DATA:

1. Maintain a steady 13 psi flow under operating conditions.
2. Have a minimum flow (see chart) of dry steam.
3. Be adequately trapped to provide dry steam. (See ball float trap.)

SERVICE CONNECTIONS:

(SS) **Steam Supply:** 3/4" NPT

(CR) **Condensate Return:** 1/2" NPT, 6.5" AFF

(C1) **Water:** Faucet location.

STEAM FLOW RATE AT 15 PSIG AT THE KETTLE						
	FAST BOIL		MEDIUM BOIL		SLOW BOIL	
	lbs/hr	kg/hr	lbs/hr	kg/hr	lbs/hr	kg/hr
80 gallon	179	87	127	58	96	44
100 gallon	191	81	143	65	110	50
125 gallon	224	102	179	81	138	63
150 gallon	269	122	215	98	165	75

BRIMFUL CAPACITIES:				
MODEL	GALLONS	QUARTS	LITERS	4 OZ. SVGS.
SL80	80	320	303	2560
ST100	100	400	379	3200
ST125	125	500	473	4000
ST150	150	600	568	4800

[1] Add 2" to "C" & "D" for 3" compression tangent draw-off valve.

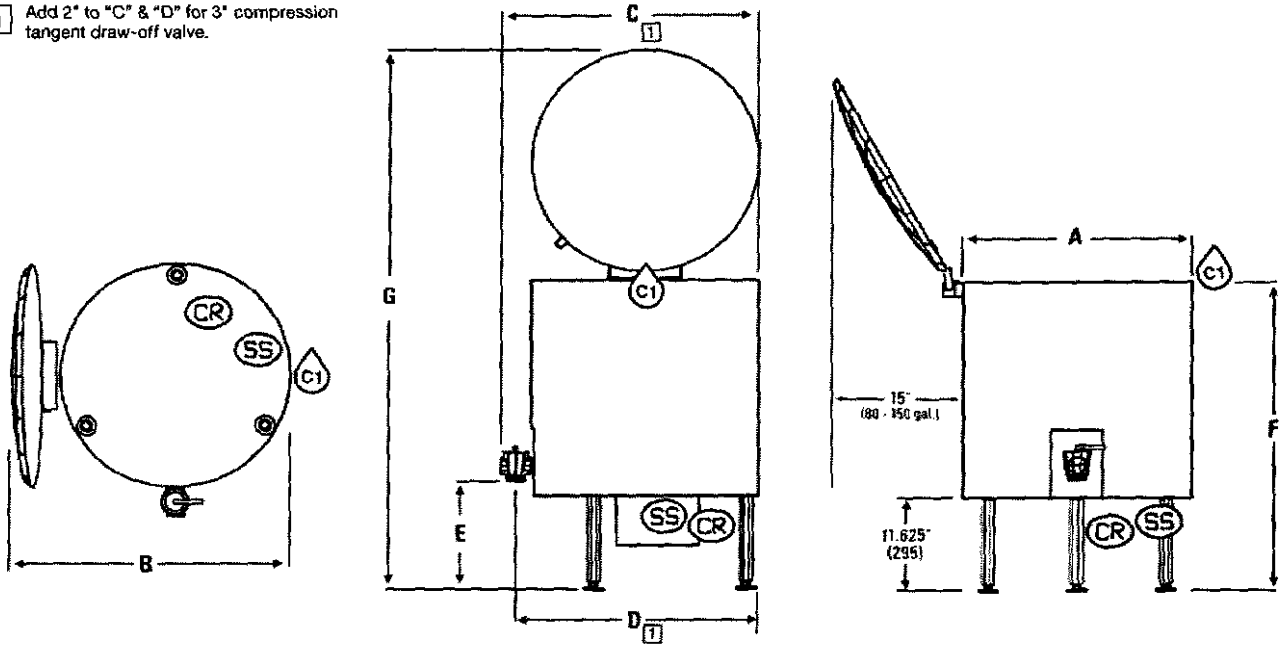

MODEL	CAPACITY	A	B	C	D	E	F	G
SL80	80 gallons 303 liters	36 1/2 (927)	58 1/2 (1486)	41 1/2 (1054)	39 1/2 (1003)	13 (330)	40 (1016)	79 (2007)
ST100	100 gallons 379 liters	36 1/2 (927)	58 1/2 (1486)	41 1/2 (1054)	39 1/2 (1003)	13 (330)	45 (1143)	84 (2134)
ST125	125 gallons 473 liters	36 1/2 (927)	58 1/2 (1486)	41 1/2 (1054)	39 1/2 (1003)	13 (330)	52 (1321)	91 (2311)
ST150	150 gallons 568 liters	36 1/2 (927)	58 1/2 (1486)	41 1/2 (1054)	39 1/2 (1003)	13 (330)	58 1/2 (1486)	97 (2464)

VULCAN
a division of ITW Food Equipment Group LLC
P.O. Box 696 ■ Louisville, KY 40201 ■ Toll-free: 1-800-814-2028 ■ Local: 502-778-2791 ■ Quote & Order Fax: 1-800-444-0602

NOTE: In line with its policy to continually improve its products, Vulcan reserves the right to change materials and specifications without notice.

SOUTHBEND

DIRECT STEAM TRI-LEG TILTING KETTLE

Job _____ Item# _____

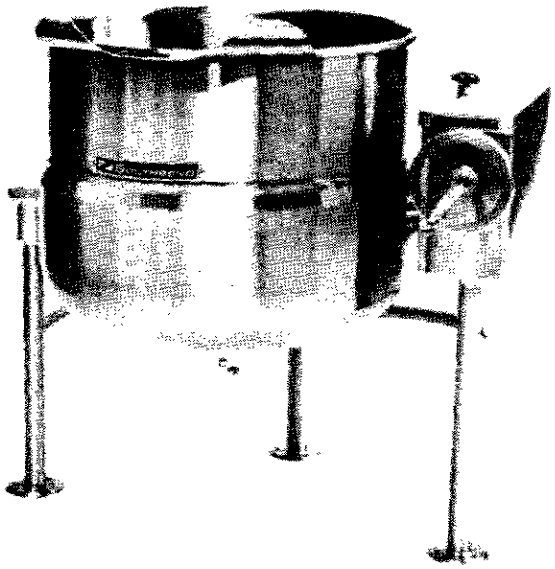

MODEL	CAPACITY	
KDLT-20	20 Gallon	76 Liter
KDLT-30	30 Gallon	114 Liter
KDLT-40	40 Gallon	151 Liter
KDLT-60	60 Gallon	227 Liter
KDLT-80	80 Gallon	303 Liter
KDLT-100	100 Gallon	379 Liter

SPECIFICATIONS:

Shall be a Southbend Model _____, direct steam connected tri-leg tilting kettle. A double wall kettle interior shall form a steam jacket around the lower 2/3 of the kettle. The bottom of the kettle shall be of hemispherical design for superior heat circulation.

The tri-leg mounting frame of stainless steel pipe shall support the kettle and tilt console, conceal the steam piping and house the steam control valve and tilt mechanism. Each leg shall be fitted with a 4 hole adjustable flanged foot for securing to the floor. The tilt mechanism shall permit the kettle to tilt forward a full 90° for complete emptying. The tilting mechanism shall be self locking for positive stop action.

Construction shall be all welded #4 finish stainless steel type 304. The interior liner on 20, 30 and 40 gallon models shall be standard 316 for high acid content cooking.

OPERATION SHALL BE BY:

Direct steam at a minimum of 5 PSI (34kPa) and a maximum of 35 PSI (241kPa).

OPTIONAL ITEMS AT EXTRA COST:

- ❑ Type 316 stainless steel liner for high acid content cooking for 60, 80 and 100 gallon models
- ❑ 50 PSI (345kPa) high pressure operation for higher cooking temperature
- ❑ 1-1/2" (38 mm) draw-off valve (TVT-1)
- ❑ 2" (50 mm) draw off-valve (TVT-2)
- ❑ 3" (76 mm) draw off-valve (TVT-3)
- ❑ 2" (50 mm) dairy valve (DDO-2T)
- ❑ 3" (76 mm) dairy valve (DDO-3T)
- ❑ Spring assist hinged cover for 20, 30 or 40 gallon models (CH-)
- ❑ Etched gallon markings (GM-)
- ❑ Etched litre markings(LM-)

ACCESSORIES:

- ❑ One piece lift off cover (C-)
- ❑ Triple basket assembly (TBA-)
- ❑ Steam trap assembly consisting of steam trap, steam control valve, check valve and line strainer (STA-1)
- ❑ Single pantry faucet with swing spout (SF-18)
- ❑ Double pantry faucet with swing spout (DF-18)
- ❑ Perforated strainer for draw-off valve (TPS-)
- ❑ Solid stainless steel disc for draw-off valve (TSS-)
- ❑ Graduated measuring strip (CMS-)
- ❑ Strainer hook (SH)
- ❑ Pan carrier (PC-4)

Models: ☐ **KDLT-20** ☐ **KDLT-30** ☐ **KDLT-40** ☐ **KDLT-60** ☐ **KDLT-80** ☐ **KDLT-100**

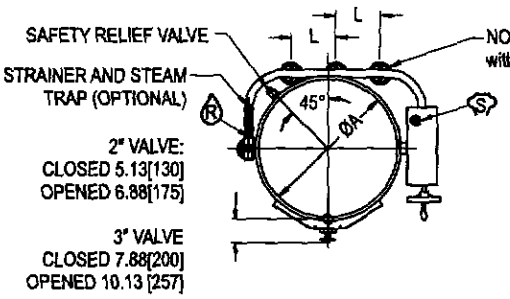

DIMENSIONS ARE IN INCHES [MM]

FLANGED FOOT DETAIL
4 EQUALLY SPACED
Ø7/16" [11mm] HOLES
ON 3 [76] B.C.

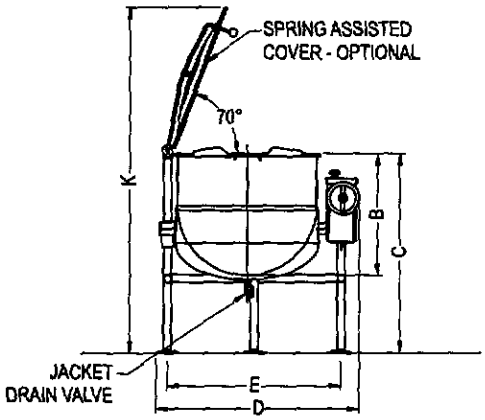

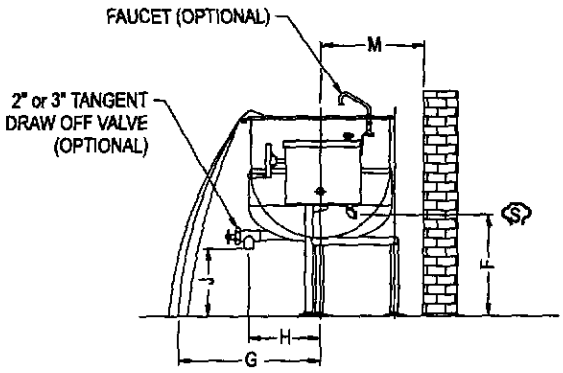

SERVICE CONNECTIONS

Ⓢ – STEAM SUPPLY: 3/4" IPS (19 mm)

Ⓡ - CONDENSATE RETURN: 1/2" IPS (13 mm)

DIMENSIONS

Model	Capacity	Units	A	B	C	D	E	F	G	H(2")	H(3")	J(2")	J(3")	K	L	M
KDLT-20	20 gallons (76 liters)	in (mm)	21" (533)	18" (460)	37" (940)	34.75" (885)	28.5" (724)	22" (559)	25.63" (651)	12" (305)	13.25" (337)	17" (432)	16.5" (419)	59.5" (1512)	N/A	15.38" (391)
KDLT-30	30 gallons (114 liters)	in (mm)	24" (610)	20" (510)	37" (940)	37.75" (960)	31.5" (800)	20.75" (527)	27.13" (689)	12.5" (317)	14.25" (362)	15" (381)	14.5" (368)	62.5" (1588)	N/A	15.38" (391)
KDLT-40	40 gallons (152 liters)	in (mm)	26" (660)	22.5" (570)	37" (940)	39.75" (1010)	33.5" (850)	20.25" (514)	28.63" (727)	13" (330)	15.25" (387)	12.5" (318)	12" (305)	64" (1626)	N/A	16.38" (416)
KDLT-60	60 gallons (227 liters)	in (mm)	29.5" (750)	26" (660)	40.5" (1029)	43.25" (1100)	37" (940)	21.5" (546)	30.13" (765)	13.75" (350)	15.5" (394)	14.5" (368)	14" (356)	74" (1879)	9.5" (241)	18.38" (467)
KDLT-80	80 gallons (303 liters)	in (mm)	33" (840)	28" (710)	42.5" (1080)	46.75" (1085)	40.5" (1030)	20" (508)	32.63" (828)	14.5" (368)	16.25" (413)	12.5" (318)	12" (305)	76" (1930)	11" (279)	19.88" (505)
KDLT-100	100 gallons (379 liters)	in (mm)	35.5" (902)	30" (762)	42.5" (1080)	49.25" (1251)	43" (1092)	27" (686)	39.25" (997)	18" (457)	20.25" (514)	10.5" (267)	10" (254)	79" (2007)	12.5" (318)	21.5" (546)

INTENDED FOR COMMERCIAL USE ONLY.
NOT FOR HOUSEHOLD USE.

SOUTHBEND
1100 Old Honeycutt Road, Fuquay-Varina, NC 27526
(919) 762-1000 www.southbendnc.com

Cleveland

DIRECT STEAM KETTLES

Project _____
Item _____
Quantity _____
FCSI Section _____
Approval _____
Date _____

TRI-LEG, DIRECT STEAM

STATIONARY, FULL STEAM JACKETED
30, 40, 60, 80, 100, 125 or 150, GALLONS
(110, 150, 225, 300, 375, 475 or 575 LITERS

MODELS: ☐ KDL-30-F ☐ KDL-80-F ☐ KDL-40-F ☐ KDL-100-F ☐ KDL-60-F ☐ KDL-125-F

Cleveland Standard Features

- Full Steam Jacketed for faster heating
- Low working height (37.00")
- Tri-leg supports of 1⅝" O.D., type 304 Stainless Steel tubular construction, with level adjustable flanged feet for floor bolting
- Kettle and all exterior surfaces are Stainless Steel for ease of cleaning
- Spring-assisted Cover: domed, hinged, one-piece rotatable (not available on KDL-125-F)
- 2" diameter Tangent Draw-off Valve, with Drain Strainer
- 50 psi Steam Jacket Rating on 30 - 60 gal. models, 35 psi Steam Jacket Rating on 80 - 125 gal. models
- 50 psi chrome plated Safety Valve on 30 - 60 gal. models, 35 psi chrome plated Safety Valve on 80 - 125 gal. models
- Condensate Drain Valve with insulated handle
- Faucet Mounting Bracket
- Steam Control Inlet Valves
- Typical approvals include NSF and ASME

Options & Accessories

- ❒ 316 Stainless Steel Kettle Liner for high acid food products (316-G)
- ❒ Lift-off Covers (CL)
- ❒ Chrome plated Steam Control Kit includes: Steam Traps, Condensate Strainers, Check Valves, nipples and fittings, factory assembled and mounted on kettle (SCK1)
- ❒ Hot and Cold Water Faucet, comes with Swing Spout
- ❒ 100 psi Pressure Option (PO) (for 125 gallons and larger)
- ❒ Cooking Baskets and Tri-Basket Supports (BS and TBS)
- ❒ Measuring Strips (MS)
- ❒ Gallon Markings (KM)
- ❒ Kettle Accessory Kit (KAK) includes:
  - ❒ Clean-up Brush (CB)
  - ❒ 36" Kettle Paddle (KP)
  - ❒ 36" Kettle Whip (KW)
  - ❒ 36" Kettle Brush (KB)
  - ❒ Draw-off Brush (DB)
  - ❒ 24 oz. Ladle (KL)
- ❒ Swing Funnels for drain (SF)
- ❒ Drain Strainers (DS-)
- ❒ Pressure Reducing Valve for regulating incoming steam pressure of over 45 psi (PRV-K)

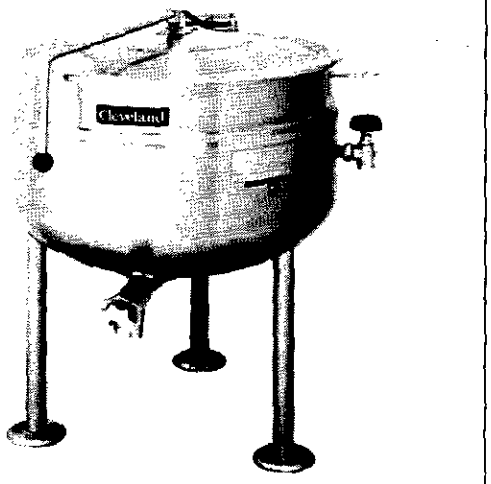

Shown with optional Steam Control Kit

Short Form Specifications

Shall be CLEVELAND, Direct Steam Kettle, Tri-leg, stationary, Model KDL-____-F. Full Steam Jacketed, type 304 Stainless Steel with 50 psi Steam Jacket Rating on 30 - 60 gallon, 35 psi on 80 gallon and larger. Tri-leg supports to be Stainless Steel. Includes spring-assisted Domed Cover and 2" diameter Tangent Draw-off Valve; heavy re-enforced Rolled Rim. To operate, connect directly to a steam source supplying from 5 to 45 psi on 30 and 40 gallon models; 30 psi on larger models.

- ❒ Hot and cold, or cold only, Kettle Filler with 60" Hose (DKF-K or SKF-K)
- ❒ Automatic Water Cooling* (AWC-1)
  * requires Console Mounting Option
- ❒ Alternate Mounting Systems - Console Mounting
- ❒ Automatic Water Meter (GMF gallons or LMF liters)
- ❒ Water Meter Stand (SWM)
- ❒ 3" diameter Tangent Draw-Off Valve w/Strainer (TD3)
- ❒ 3" diameter Butterfly Valve (BV3)
- ❒ Pre-Rinse Spray Head and Hose (PRSK)
- ❒ Correctional Packages
- ❒ Heat Deflector Shield (HS001)

1333 East 179 St., Cleveland, Ohio, U.S.A. 44110
Tel: 1-216-481-4900 Fax: 1-216-481-3782
Web Site: www.ClevelandRange.com Email: Steam@ClevelandRange.com
Manitowoc

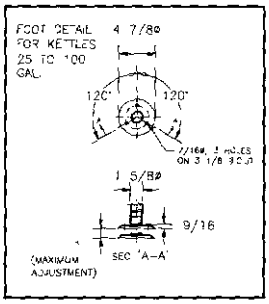

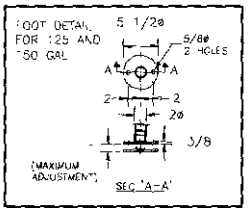

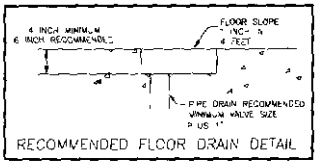

RECOMMENDED FLOOR DRAIN DETAIL

CAPACITIES: (in 8 oz. servings, other sizes may be calculated.)

30 Gallon / 110 liters ...	480 servings
40 Gallon / 150 liters ...	640 servings
60 Gallon / 225 liters ...	960 servings
80 Gallon / 300 liters ...	1280 servings
100 Gallon / 375 liters ...	1600 servings
125 Gallon / 475 liters ...	2000 servings
150 Gallon / 575 liters ...	2400 servings

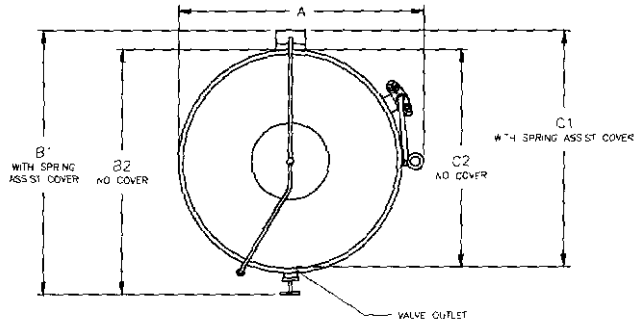

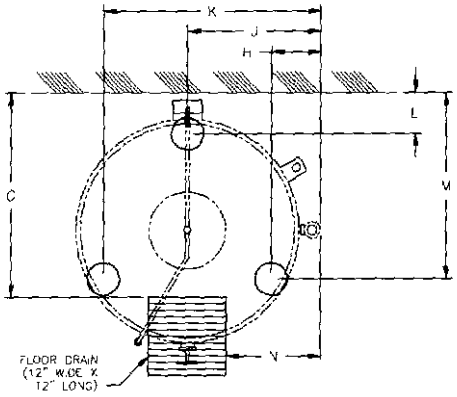

RECOMMENDED FLOOR DRAIN DETAIL FOR KETTLES WITH TANGENT DRAW OFF OR DAIRY VALVE

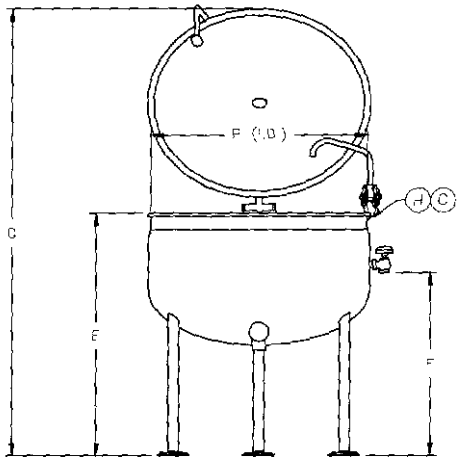

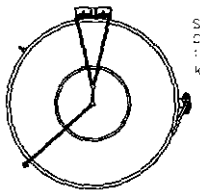
SPRING ASSIST COVER FOR 125 GALLON KETTLES AND UP

UNIT SHOWN WITH 2" TANGENT DRAW-OFF VALVE, SPRING ASSIST COVER, HOT AND COLD WATER FAUCET AND STEAM CONTROL KIT.

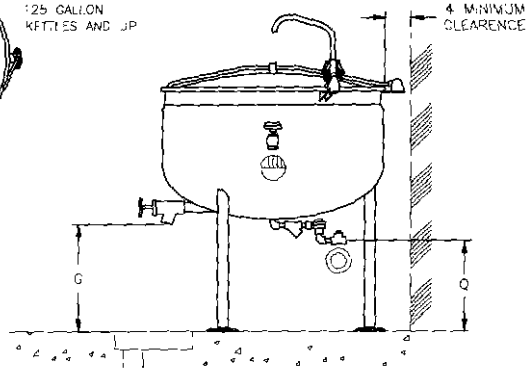

MODEL	STEAM JACKET RATING				DIRECT STEAM	CONDENSATE RETURN	(H) HOT WATER: (C) COLD WATER:	CLEARANCE	SHIPPING WEIGHT
	35 PSI	50 PSI	70 PSI	100 PSI					
KDL-30-F	N/A	STANDARD	N/A	OPTIONAL	3/4" NPT	1/2" NPT	1/2" NPT (DPK) 3/8" COPPER TUBE (SPK)	RIGHT: 0 INCHES LEFT: 0 INCHES REAR: 4 INCHES (MINIMUM)	135 LBS / 63 KG
KDL-40-F									185 LBS / 84 KG
KDL-60-F			OPTIONAL	N/A					205 LBS / 93 KG
KDL-80-F	STANDARD	N/A							315 LBS / 143 KG
KDL-100-F					1 1/4" NPT				360 LBS / 164 KG
KDL-125-F		OPTIONAL	N/A						410 LBS / 186 KG
KDL-150-F									490 LBS / 223 KG

NOTE: ALL VERTICAL DIMENSIONS SHOWN ARE MINIMUM. FEET ARE ADJUSTABLE TO 1 INCH MAXIMUM.

DIMENSIONS

GALS/ LITERS		A	B1	B2	C1	C2	D	E	F	G	H	J	K	L	M	N	O	P(ID)	Q
30	IN	34.63	38.88	36.13	34.13	31.38	68.00	37.25	28.50	17.38	7.63	19.00	30.5	6.38	26.25	13.00	29.38	29.25	15.38
110	mm	867	987	918	867	797	1727	946	724	441	194	483	775	162	667	330	746	743	391
40	IN	38.13	41.25	38.50	36.50	33.75	71.13	37.13	27.88	15.38	7.88	20.75	33.63	6.38	28.88	14.75	31.75	33.00	13.38
150	mm	968	1048	97.8	927	857	1807	943	708	390	200	527	854	162	733	375	806	838	340
60	IN	40.63	43.13	40.38	38.38	35.63	73.63	37.25	27.50	14.25	8.00	22.00	36.00	6.38	30.75	16.00	33.63	35.50	12.25
225	mm	1032	1095	1026	975	905	1870	946	699	362	203	559	914	162	781	406	854	902	311
80	IN	45.13	46.63	43.50	41.88	38.75	77.50	37.25	26.50	12.00	8.25	24.25	40.25	6.38	34.13	18.25	36.75	40.00	10.00
300	mm	1146	1184	1105	1064	984	1969	946	673	305	210	626	1022	162	867	464	933	1016	254
100	IN	51.00	47.00	43.38	42.00	38.75	82.00	37.00	29.38	9.00	7.88	26.75	45.63	7.25	34.38	20.75	36.75	45.00	9.00
375	mm	1295	1194	1102	1067	984	2083	940	746	229	200	679	1159	184	873	527	933	1143	229
125	IN	53.13	48.88	45.63	44.13	39.25	89.25	39.00	32.75	10.00	8.25	28.25	48.38	7.25	36.88	22.25	37.25	48.00	8.00
475	mm	1349	1241	1159	1121	997	2267	991	832	254	210	718	1229	184	937	565	946	1219	203
150	IN	53.13	48.88	45.63	44.13	39.25	91.25	41.00	32.75	10.00	8.25	28.25	48.38	7.25	36.88	22.25	37.25	48.00	8.00
575	mm	1349	1241	1159	1121	997	2318	1041	832	254	210	718	1229	184	937	565	946	1219	203

NOTES:

Cleveland Range reserves right of design improvement or modification, as warranted.
Many regional, state and local codes exist and it is the responsibility of the owner and installer to comply with the codes.
Installation of backflow preventers, vacuum breakers and other specific code requirements is the responsibility of the owner and installer.
Cleveland Range equipment is built to comply with applicable standards for manufacturers. Included among those approval agencies are U.L., A.G.A., NSF, ASME/N.Bd., CSA, CGA, ETL and others.

(NOT TO SCALE)
SECT. X PAGE 20
0609
Litho in U.S.A.

Direct Steam Tri-Leg Tilting Kettle

Job _____ Item# _____

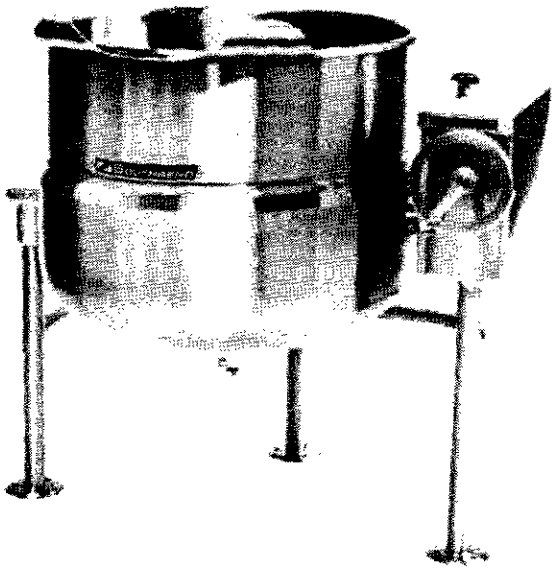

Model	Capacity	
KDLT-20	20 Gallon	76 Liter
KDLT-30	30 Gallon	114 Liter
KDLT-40	40 Gallon	151 Liter
KDLT-60	60 Gallon	227 Liter
KDLT-80	80 Gallon	303 Liter
KDLT-100	100 Gallon	379 Liter

SPECIFICATIONS:

Shall be a Southbend Model _____, direct steam connected tri-leg tilting kettle. A double wall kettle interior shall form a steam jacket around the lower 2/3 of the kettle. The bottom of the kettle shall be of hemispherical design for superior heat circulation.

The tri-leg mounting frame of stainless steel pipe shall support the kettle and tilt console, conceal the steam piping and house the steam control valve and tilt mechanism. Each leg shall be fitted with a 4 hole adjustable flanged foot for securing to the floor. The tilt mechanism shall permit the kettle to tilt forward a full 90° for complete emptying. The tilting mechanism shall be self locking for positive stop action.

Construction shall be all welded #4 finish stainless steel type 304. The interior liner on 20, 30 and 40 gallon models shall be standard 316 for high acid content cooking.

OPERATION SHALL BE BY:

Direct steam at a minimum of 5 PSI (34kPa) and a maximum of 35 PSI (241kPa).

OPTIONAL ITEMS AT EXTRA COST:

- ❑ Type 316 stainless steel liner for high acid content cooking for 60, 80 and 100 gallon models
- ❑ 50 PSI (345kPa) high pressure operation for higher cooking temperature
- ❑ 1-1/2" (38 mm) draw-off valve (TVT-1)
- ❑ 2" (50 mm) draw off-valve (TVT-2)
- ❑ 3" (76 mm) draw off-valve (TVT-3)
- ❑ 2" (50 mm) dairy valve (DDO-2T)
- ❑ 3" (76 mm) dairy valve (DDO-3T)
- ❑ Spring assist hinged cover for 20, 30 or 40 gallon models (CH-)
- ❑ Etched gallon markings (GM-)
- ❑ Etched litre markings(LM-)

ACCESSORIES:

- ❑ One piece lift off cover (C-)
- ❑ Triple basket assembly (TBA-)
- ❑ Steam trap assembly consisting of steam trap, steam control valve, check valve and line strainer (STA-1)
- ❑ Single pantry faucet with swing spout (SF-18)
- ❑ Double pantry faucet with swing spout (DF-18)
- ❑ Perforated strainer for draw-off valve (TPS-)
- ❑ Solid stainless steel disc for draw-off valve (TSS-)
- ❑ Graduated measuring strip (CMS-)
- ❑ Strainer hook (SH)
- ❑ Pan carrier (PC-4)

Models: ☐ **KDLT-20** ☐ **KDLT-30** ☐ **KDLT-40** ☐ **KDLT-60** ☐ **KDLT-80** ☐ **KDLT-100**

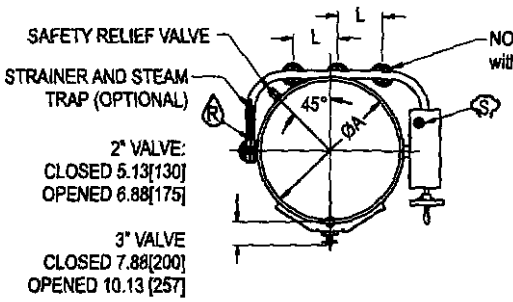

DIMENSIONS ARE IN INCHES [MM]

FLANGED FOOT DETAIL
4 EQUALLY SPACED
Ø7/16" [11mm] HOLES
ON 3 [76] B.C.

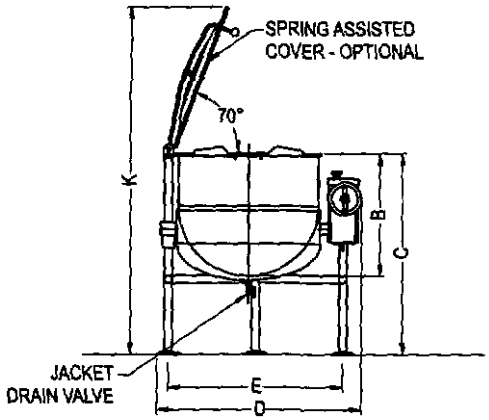

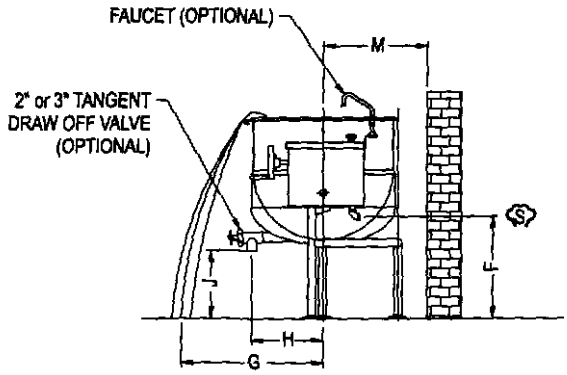

SERVICE CONNECTIONS

Ⓢ – STEAM SUPPLY: 3/4" IPS (19 mm)

Ⓡ - CONDENSATE RETURN: 1/2" IPS (13 mm)

DIMENSIONS

Model	Capacity	Units	A	B	C	D	E	F	G	H(2")	H(3")	J(2")	J(3")	K	L	M
KDLT-20	20 gallons (76 liters)	in (mm)	21" (533)	18" (460)	37" (940)	34.75" (885)	28.5" (724)	22" (559)	25.63" (651)	12" (305)	13.25" (337)	17" (432)	16.5" (419)	59.5" (1512)	N/A	15.38" (391)
KDLT-30	30 gallons (114 liters)	in (mm)	24" (610)	20" (510)	37" (940)	37.75" (960)	31.5" (800)	20.75" (527)	27.13" (689)	12.5" (317)	14.25" (362)	15" (381)	14.5" (368)	62.5" (1588)	N/A	15.38" (391)
KDLT-40	40 gallons (152 liters)	in (mm)	26" (660)	22.5" (570)	37" (940)	39.75" (1010)	33.5" (850)	20.25" (514)	28.63" (727)	13" (330)	15.25" (387)	12.5" (318)	12" (305)	64" (1626)	N/A	16.38" (416)
KDLT-60	60 gallons (227 liters)	in (mm)	29.5" (750)	26" (660)	40.5" (1029)	43.25" (1100)	37" (940)	21.5" (546)	30.13" (765)	13.75" (350)	15.5" (394)	14.5" (368)	14" (356)	74" (1879)	9.5" (241)	18.38" (467)
KDLT-80	80 gallons (303 liters)	in (mm)	33" (840)	28" (710)	42.5" (1080)	46.75" (1085)	40.5" (1030)	20" (508)	32.63" (828)	14.5" (368)	16.25" (413)	12.5" (318)	12" (305)	76" (1930)	11" (279)	19.88" (505)
KDLT-100	100 gallons (379 liters)	in (mm)	35.5" (902)	30" (762)	42.5" (1080)	49.25" (1251)	43" (1092)	27" (686)	39.25" (997)	18" (457)	20.25" (514)	10.5" (267)	10" (254)	79" (2007)	12.5" (318)	21.5" (546)

INTENDED FOR COMMERCIAL USE ONLY.
NOT FOR HOUSEHOLD USE.

SOUTHBEND
1100 Old Honeycutt Road, Fuquay-Varina, NC 27526
(919) 762-1000 www.southbendnc.com

Cleveland

DIRECT STEAM KETTLES

Project _____
Item _____
Quantity _____
FCSI Section _____
Approval _____
Date _____

QUAD-LEG, DIRECT STEAM

TILTING, 2/3 STEAM JACKETED
80 or 100 GALLONS (300 or 375 LITERS)

MODELS: ☐ KDL-80-T ☐ KDL-125-T ☐ KDL-100-T ☐ KDL-150-T

Cleveland Standard Features

- Kettle legs of 1⅝" OD, type 304 Stainless Steel, with 3 level adjustable feet, with three-bolt flanges for floor bolting
- Type 304 Stainless Steel construction, with #4 finish on kettle and supports
- Tilting Mechanism with permanently lubricated, self-locking, Worm Drive of space saving design
- 50 psi Steam Jacket Rating on 80 - 100 gal. models, 35 psi Steam Jacket Rating on 125 - 150 gal. models
- 50 psi chrome plated Safety Valve on 80 - 100 gal. models, 35 psi chrome plated Safety Valve on 125 - 150 gal. models
- High Capacity Pouring Lip
- Condensate Drain Valve with insulated handle
- Steam Control Valve mounted on console
- Typical approvals include NSF and ASME

Options & Accessories

- ☐ Type 316 Stainless Steel Kettle Liner for high acid food products (316)
- ☐ Lift-off Covers (CL)
- ☐ Steam Control Kit includes: Steam Trap, Condensate Strainer, Check Valve, nipples and fittings, factory assembled and mounted on kettle (SCK2)
- ☐ Spring-assisted, hinged, rotatable, domed Stainless Steel Cover (CHS-)
- ☐ Hot and Cold Water Faucet, comes with Swing Spout (DPK)
- ☐ 2" or 3" diameter Tangent Draw-Off Valve (TD2 or TD3*), *TD3 will raise height of kettle by 5-5/8" (143mm)
- ☐ 3" diameter Butterfly Valve (BV3)
- ☐ 100 psi Pressure Option (PO) (for 125 gallons and larger)
- ☐ Cooking Baskets and Tri-Basket Supports (BS and TBS)
- ☐ Pan Carrier (PCK)
- ☐ Measuring Strips (MS)
- ☐ Gallon Markings (KM)
- ☐ Kettle Accessory Kit (KAK) includes:
  - ☐ Clean-up Brush (CB)
  - ☐ 36" Kettle Paddle (KP)
  - ☐ 36" Kettle Whip (KW)
  - ☐ 36" Kettle Brush (KB)
  - ☐ Draw-off Brush (DB)
  - ☐ 24 oz. Ladle (KL)
- ☐ Swing Funnels for drain (SF)
- ☐ Faucet Mounting Bracket (FBKT)
- ☐ Pressure Reducing Valve for regulating incoming steam pressure of over 45 psi (PRV-K)

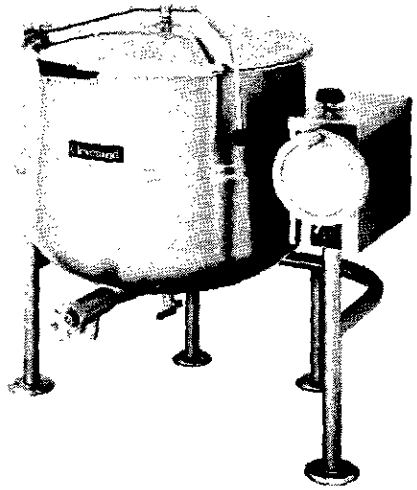

Shown with optional Spring-Assisted Cover, 2" Tangent Draw-Off Valve

Short Form Specifications

Shall be CLEVELAND, Direct Steam Kettle, Quad-leg mounted, Model KDL - ____ - T, ____ gallons, Tilting (hand or power) 2/3 Steam Jacketed. Type 304 Stainless Steel kettle and support legs. 50 psi Steam Jacket Rating on 80 - 100 gallon, 35 psi on125 gallon and larger; Steam Control Valve; heavy re-enforced Rolled Rim. To operate, connect directly to a steam source supplying 10 to 45 psi steam.

- ☐ Hot and cold, or cold only, Kettle Filler with 60" Hose (DKF-K or SKF-K)
- ☐ Automatic Water Cooling (AWC-1), requires Console Mounting Option
- ☐ Alternate Mounting Systems - Console Mounting
- ☐ Automatic Water Meter (GMF or LMF)
- ☐ Water Meter Stand (SWM)
- ☐ Food Strainer (FS)
- ☐ Flow Diverter (FD)
- ☐ Drain Strainers (DS-)
- ☐ Pre-Rinse Spray Head and Hose (PRSK)
- ☐ Heat Deflector Shield (HS001)
- ☐ Correctional Packages

1333 East 179 St., Cleveland, Ohio, U.S.A. 44110
Tel: 1-216-481-4900 Fax: 1-216-481-3782
Web Site: www.ClevelandRange.com Email: Steam@ClevelandRange.com

Manitowoc

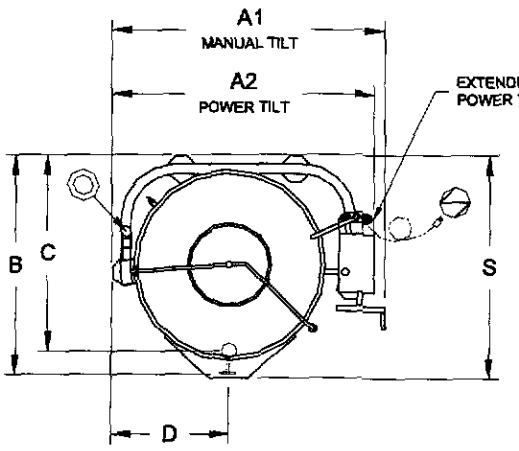

CAPACITIES: (in 8 oz. servings, other sizes may be calculated.)
80 Gallon / 300 liters . . . 1280 servings
100 Gallon / 375 liters . . . 1600 servings
125 Gallon / 475 liters . . . 2000 servings
150 Gallon / 575 liters . . . 2400 servings

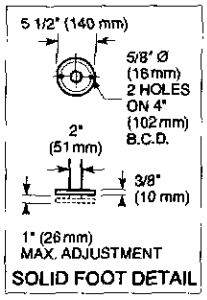

SOLID FOOT DETAIL

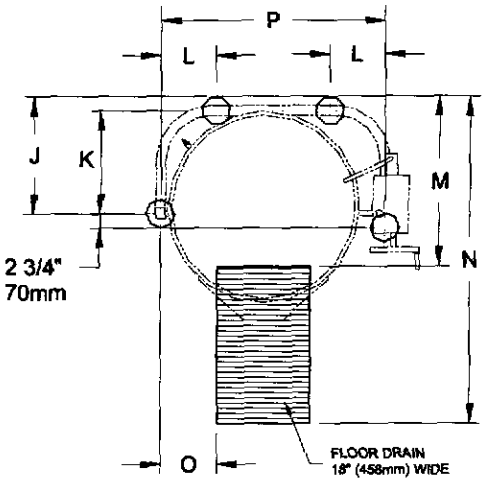

NOTE: TD3, 3" tangent draw off will raise height of kettle by 5-5/8" (143mm).

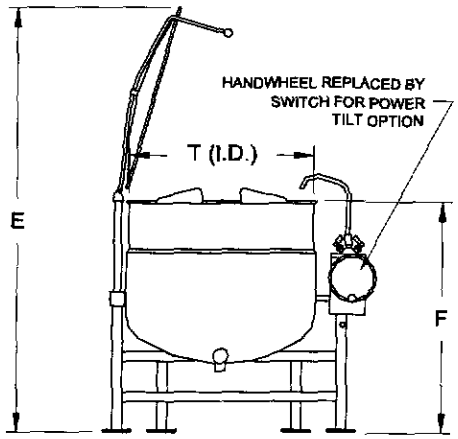

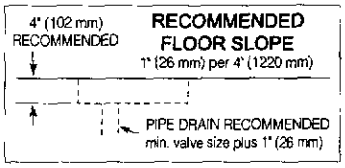

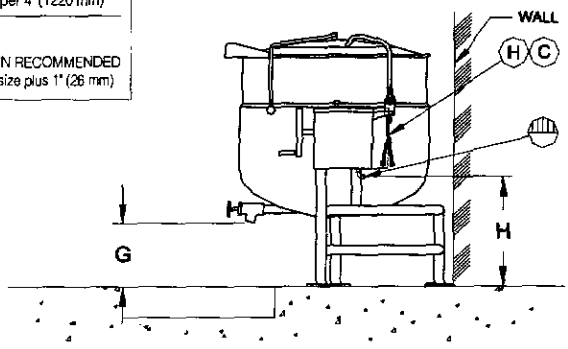

UNIT SHOWN WITH OPTIONAL 2" TANGENT DRAW-OFF VALVE, SPRING ASSIST COVER, HOT AND COLD WATER FAUCET AND STEAM CONTROL KIT.

DIMENSIONS

GALS./ LITERS		A1	A2	B	C	D	E	F	G	H	J	K	L	M	N	O	P	S	T.I.D.
80	IN	48 5/8	47	38 3/8	35 5/8	21 5/8	79 1/8	42 5/8	12 1/2	21 1/4	20 1/2	17 1/2	11 3/8	29 5/8	60	10 1/8	40 3/4	39	33
300	IN	1236	1194	975	905	550	2010	1083	318	540	521	445	289	753	1524	258	1036	991	839
100	IN	51 1/8	49 1/2	43	38 3/8	22 7/8	86 1/8	44 7/8	12 3/4	22 1/4	23	20	11 5/8	32 5/8	64 1/4	11 1/8	43 1/4	43 1/2	35 1/2
375	mm	1299	1258	1093	975	582	2188	1140	324	566	585	508	296	829	1632	283	1099	1105	902
125	IN	55 5/8	54	48	43 1/4	25 1/8	90	46 3/8	13 3/4	24 1/2	27	24	11 7/8	38 1/4	72	13 3/8	47 3/4	50	40
475	mm	1413	1372	1220	1099	639	2286	1178	350	623	686	610	302	972	1829	340	1213	1270	1016
150	IN	55 5/8	54	48	43 1/4	25 1/8	94	50 3/4	13 1/2	25 1/4	27	24	11 7/8	38 1/4	72	13 3/8	47 3/4	50	40
575	mm	1413	1372	1220	1099	639	2388	1290	342	642	686	610	302	972	1829	340	1213	1270	1016

DIRECT STEAM	ELECTRIC	WATER	CLEARANCE
Steam Supply: • Furnish ¼" IPS minimum line. • Operating Pressure 10 to 45 psi.	VOLTS 1 PH / AMPS 115 / 5 240 / 2.5 For Power Pour models	¾" O.D copper tube. When ordered with optional faucet.	RIGHT = 4.00" handle clearance LEFT = 0" REAR = 0"

NOTES:
Cleveland Range reserves right of design improvement or modification, as warranted.
Many regional, state and local codes exist and it is the responsibility of the owner and installer to comply with the codes.
Installation of backflow preventers, vacuum breakers and other specific coder requirements is the responsibility of the owner and installer.
Cleveland Range equipment is built to comply with applicable standards for manufacturers. Included among those approval agencies are U.L., A.G.A., NSF, ASME/N.Bd., CSA, CGA, ETL and others.

(NOT TO SCALE)
SECT. X PAGE 12
0609
Litho in U.S.A.

VICTORY
110 Woodcrest Road, Cherry Hill, NJ 08003-3648
856.428.4200 • 800.523.5008 • Fax: 856.428.7299
www.victoryrefrigeration.com • email: sales@victoryrefrigeration.com

PROJECT: _____
LOCATION: _____
ITEM #: _____
QUANTITY: _____

ULTRASPEC™ SERIES

PASS-THRU REFRIGERATORS

ULTRASPEC V-TEMP CONTROL™

STANDARD FEATURES

- V-TEMP™ Electronic Control System
- High Performance, Balanced, Top-Mounted Refrigeration
- Environmentally Safe R-134a Refrigerant
- Energy Efficient, Dual-Speed EC Evaporator Fan Motor(s)
- Plasticized Evaporator Fin Coils
- Non-Electric Condensate Evaporator
- Foamed-in-Place Polyurethane Insulation
- Heavy Duty Cylinder Locks
- Self-Closing Doors with 120° Hold Open Feature
- Cam-Lift Hinges, Guaranteed for Life
- Ergonomically Correct Door Handles, Guaranteed for Life
- S, SA Series have 6" High, Adjustable Stainless Steel Legs
- A Series has 6" High Standard Black Legs
- Hinged Front Shroud Makes Condenser Cleaning Easier
- Proximity Door Switch Activates Interior Lighting
- One Piece, Snap-In Magnetic Door Gasket(s)
- Anti-Condensate Door Perimeter Heaters
- Stainless Steel Interior Door Liner
- Energy Saving Thermal Breaker Caps, Guaranteed for Life
- Three (3) Epoxy Coated Wire Shelves per Cabinet Section
- Cord and Plug (see electrical data for details)

OPTIONS AND ACCESSORIES

- Full and Half-Size Glass Doors
- Change Door Swing
- Remote Models
- Correctional Facilities Options
- Fluorescent Lighting
- LED Lighting
- Stainless Steel Shelves
- 6" Overall Height Casters (Set of 4)
- Exterior Laminate Décor
- Adjustable Tray and Pan Slides
- Optional Voltages
- ***FLEXTEMP*** Performance Mode
- USB Data Recorder
- RS-485 Serial Interface
- Two (2) Year Service Warranty

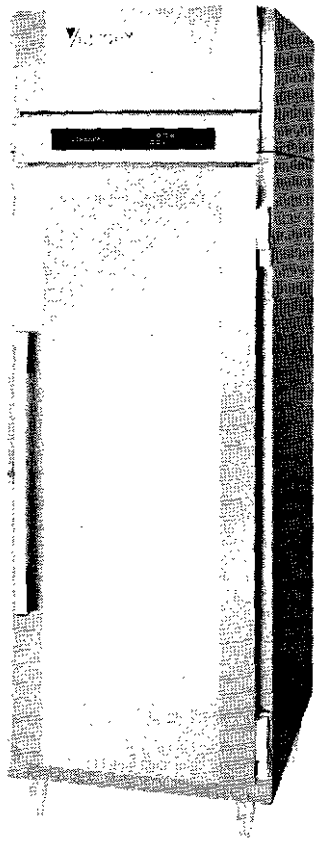

RS-1D-S1-PT

MODELS

	LONG-DOOR	HALF-DOOR
S SERIES Stainless Steel Exterior and Interior	RS-1D-S1-PT	RS-1D-S1-PT-HD
	RS-2D-S1-PT	RS-2D-S1-PT-HD
	RS-3D-S1-PT	RS-3D-S1-PT-HD
SA SERIES Stainless Steel Exterior and Aluminum Interior	RSA-1D-S1-PT	RSA-1D-S1-PT-HD
	RSA-2D-S1-PT	RSA-2D-S1-PT-HD
	RSA-3D-S1-PT	RSA-3D-S1-PT-HD
A SERIES Stainless Steel Front and Doors, Aluminum Ends and Interior	RA-1D-S1-PT	RA-1D-S1-PT-HD
	RA-2D-S1-PT	RA-2D-S1-PT-HD

NOTE: Not all marks refer to all models

1 Year Parts and Labor Warranty • 5 Year Compressor Warranty
2 Year V-TEMP™ Control Warranty

Victory Refrigeration specification sheets are available online at **www.victoryrefrigeration.com**

APPROVALS:

VICTORY — PASS-THRU REFRIGERATORS

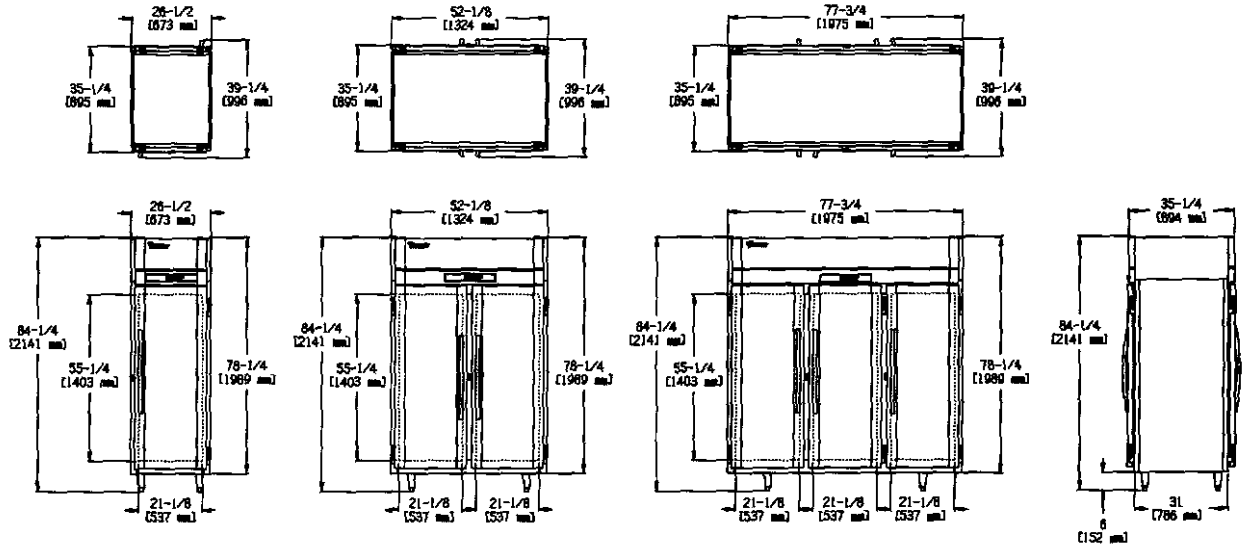

We reserve the right to change specifications and product design without notice. Such revisions do not entitle the buyer to corresponding changes, improvements, additions or replacements for previously purchased equipment.

Dimensional tolerances +/- ¼". Metric dimensions (MM)

CABINET CONSTRUCTION
The cabinet front and doors are constructed of heavy gauge, polished stainless steel to maintain an attractive appearance after years of heavy use. Polyurethane foam insulation throughout ensures the ultimate in energy efficiency. The front shroud lifts up to for easy access when cleaning the condenser unit.

DOOR CONSTRUCTION
The doors are heavy gauge, polished stainless steel with a stainless steel interior liner. Each door is provided with a cylinder lock and ergonomically correct vertical handle. The door hinges are self-closing and have a hold-open feature at 120° which facilitates product loading. Proximity switches energize the recessed interior incandescent lighting when the door is opened. Humidity control wires around the door jamb prevent condensation from forming on the front of the cabinet in high humidity environments. The wires are concealed by a high impact, non-conducting thermal breaker cap.

REFRIGERATION SYSTEM
All components of the high efficiency, air-cooled, self-contained refrigeration system are mounted on top of the cabinet out of the food storage zone providing greater usable storage space. Environmentally friendly R-134a refrigerant is efficiently metered by a capillary system providing a constant, safe operating temperature and quick "recovery" under the most demanding conditions. The hermetically sealed systems are designed to operate at 38°F. Each cooling coil has plasticized fin coils to resist food acids and dual-speed EC fan motor(s) for greater cooling capacity and efficiency. All condensate water is disposed of automatically by the energy efficient, non-electric condensate evaporator.

INTERIOR STORAGE ARRANGEMENTS
Each cabinet section is provided with three heavy-duty, epoxy coated wire shelves. The shelves are adjustable in one inch increments. A wide door opening allows for the use of a variety of optional pan slide configurations including 18" x 26" and 12" x 20" pans.

V-TEMP™ CONTROL SYSTEM
The easy to use V-TEMP™ Control is provided standard with a two year parts and labor warranty. This durable, water resistant microprocessor monitors and controls the entire temperature maintenance process. It includes an ON/OFF switch, manual defrost, interior light switch, LED temperature indicator in °C or °F, a HI/LO audio/visual temperature alarm , power supply interruption, door ajar and "clean condenser" alarms. A manager's "lock-out" feature is provided to safeguard pre-determined control settings. A HAACP Event Indicator/Memory feature announces and records up to nine (9) alarm events. Unique to the V-TEMP™ are two standard modes of operation:

- SUPERCOOL - Provides a lower "set-point" refrigeration condition for a set period of time when food has just been loaded into the refrigerator and needs to be quickly brought back down to a safe temperature.
- ENERGY SAVER - The cabinet automatically reverts to the energy saving mode when there are no door openings for four hours.

A FLEXTEMP mode of operation is available as an option. FLEXTEMP provides the ability to select a unique temperature from 28°F to 40°F. This optional feature is ideal for seasonal menu changes and items with specific temperature requirements for dairy, meat, fish or poultry.

CHARACTERISTICS	1 SECTION	2 SECTION	3 SECTION
DIMENSIONAL DATA			
Capacity Net (cubic ft.)	23.7	48	75.9
Width, Overall (in.)	26 ½	52 ⅛	77 ¾
Depth, Overall (inc. handles)	39 ¼	39 ¼	39 ¼
Depth, Door(s) Open 90°	82 ½	82 ½	82 ½
Clear Door Width (in.)	21 ⅛	21 ⅛	21 ⅛
Clear Half-Door Height (in.)	25 ⅜	25 ⅜	25 ⅜
Clear Full-Door Height (in.)	55 ¼	55 ¼	55 ¼
Height Overall (inc. 6" legs)	84 ¼	84 ¼	84 ¼
No. Full/Half Doors	2F, 4H	4F, 8H	6F, 12H
No. of Shelves	3	6	9
Shelf Area (square ft.)	15.4	33.2	50.1
ELECTRICAL DATA			
Cabinet Voltage	115/60/1	115/60/1	115/60/1
Feed Wires	2	2	2
Condensing Unit Voltage	115/60/1	115/60/1	115/60/1
NEMA Plug	5-15 P	5-15P	5-20P
Total Amperes	9.8	10.7	13.9
REFRIGERATION DATA			
Condensing Unit Size	⅓ HP	⅓ HP	½ HP
Refrigerant	R-134a	R-134a	R-134a

NOTE: Plug style, voltage and full load amps may vary depending on certain options selected such as optional voltages and compressor upgrades.

REMOTE APPLICATIONS
See form V-RRDS1 for remote refrigeration characteristics by model

CRATED DIMENSIONS & WTS.	HT.	WIDTH	DEPTH	CU. FT.	LBS
ONE SECTION	84 ½	36	43	75.70	320
TWO SECTION	84 ½	59 ¼	43	124.59	510
THREE SECTION	84 ½	86 ½	43	181.89	660

NOTE: In order to provide peak operating performance the cabinet must have a 2 inch all around clearance and 12 inches above the top of the condensing unit. This ensures an adequate air supply and space for routine maintenance and/or service if required.

Copyright February 2012
Printed in USA

Delfield

6000XL

Solid Door Reach-in Refrigerators

Project _____
Item _____
Quantity _____
CSI Section 11400
Approved _____
Date _____

6000XL: Solid Door Reach-in Refrigerator

Models

- 6025XL-S Single section full height door
- 6051XL-S Two section full height doors
- 6076XL-S Three section full height doors
- 6025XL-SR Remote full height door
- 6051XL-SR Remote full height doors
- 6076XL-SR Remote full height doors
- 6025XL-SH Single section half height doors
- 6051XL-SH Two section half height doors
- 6076XL-SH Three section half height doors
- 6025XL-SHR Remote half height doors
- 6051XL-SHR Remote half height doors
- 6076XL-SHR Remote half height doors

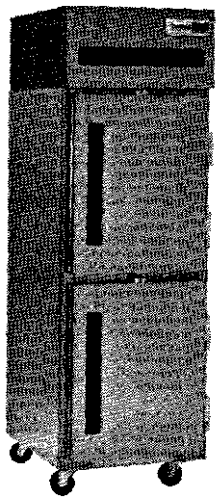

6025XL-SH

Standard Features

- Stainless steel doors and front shroud
- Aluminum sides
- Seamless, Delrite® ABS interior liner
- Top mounted refrigeration system
- High performance Delflow refrigeration, designed to maintain 33°F to 40°F
- Ships with casters mounted from factory (2&3 section units only)
- Easy to adjust epoxy shelves (three per section)
- Easy to read digital thermometer with visual high/low temp alarms
- 10' cord and plug attached
- Edgemount door hinges
- Pressure relief valve is standard to prevent door vapor lock
- High density foamed in place environmentally friendly, Kyoto Protocol Compliant, Non ODP (Ozone Depletion Potential), Non GWP (Global Warming Potential) polyurethane insulation keeps energy costs low
- Environmentally friendly R404a refrigerant
- Interior accepts 18" x 26" sheet pans on shelves or on optional tray racks
- Self closing doors with stay open feature at 120°
- Ergonomically correct, easy grip door handles
- Three year parts and labor warranty and an additional two year compressor parts warranty, limited lifetime liner warranty

Options & Accessories

- Extra shelves
- Non standard hinging
- Legs in lieu of casters
- Tray rack (TR-BB)
- Stainless steel ends/backs
- 220/60/1 voltage package*

** Inclusion of these options will alter the electrical specifications of unit*

Specifications

Exterior: Top and bottom are constructed of 24-gauge galvanized steel. Exterior sides are 0.032 aluminum. Front housing is 22-gauge stainless steel.

Doors: Unit is provided with hinged solid front door(s). Door exterior is constructed of 22-gauge stainless steel. Interior door liner is ABS. Doors are provided with locks, magnetic gaskets, self-closing, edgemount hinges; and quick grip long length door handle(s).

Interior: Liner is constructed of seamless, one piece ABS material with 15 molded shelf supports spaced 3.00" (76mm) apart. Three epoxy coated wire shelves, rated at 250 lb. load capacity each, are provided per section. Liner comes with a limited lifetime warranty.

Units are completely insulated with a minimum of 2.00" (5cm) high density foamed in place environmentally friendly, Kyoto Protocol Compliant, Non ODP (Ozone Depletion Potential), Non GWP (Global Warming Potential) polyurethane.

Interior is lighted by one 40-watt incandescent light on one and two door models, and two 40-watt incandescent lights on three door models. Lights are located outside of the food zone. Door activated switches control the lights.

Refrigeration system: All components are mounted to the exterior cabinet ceiling, outside the food zone and are assembled as one piece and can be removed as one piece. Environmentally friendly R404A refrigerant is used. System has the capability of maintaining between 33°F and 40°F in heavy use food service operations. Refrigerant is metered using a highly responsive thermostatic expansion valve. System is controlled using Delfield's ACT-Advanced Control Technology electronic temperature control, which provides improved pull down times, reducing compressor cycling and longer compressor life with lower energy consumption.

Control system uses adaptive defrost to assure evaporator coil is free of ice and operating at optimum efficiency. Evaporator condensate is eliminated using an energy efficient hot gas system. Temperature is displayed with digital display using a blue LED.

Others: Unit is supplied standard with a 10' cord and plug, attached. 4" diameter casters with an overall height of 5" are mounted on the unit from the factory on self-contained models (2&3 section units only).

Remote units are standard with legs. Legs are constructed of painted metal and are 6" high with 1" adjustability to compensate for installation location factors.

ENERGY STAR
Only Models
6025XL-S
6025XL-SH
6051XL-S
6051XL-SH

980 S. Isabella Rd.
Mt. Pleasant, Michigan 48858

Phone: 800-733-8948 or 989-773-7981
Fax: 800-669-0619

www.delfield.com

Manitowoc

Delfield

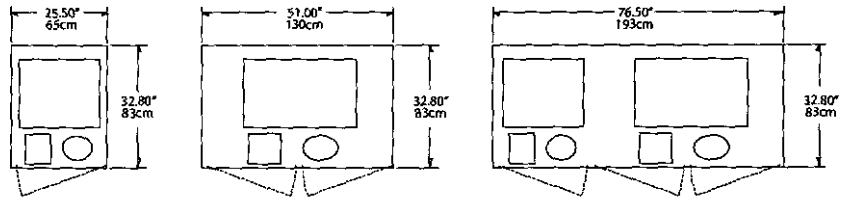

Plan View 6025XL-S | Plan View 6051XL-S | Plan View 6076XL-S

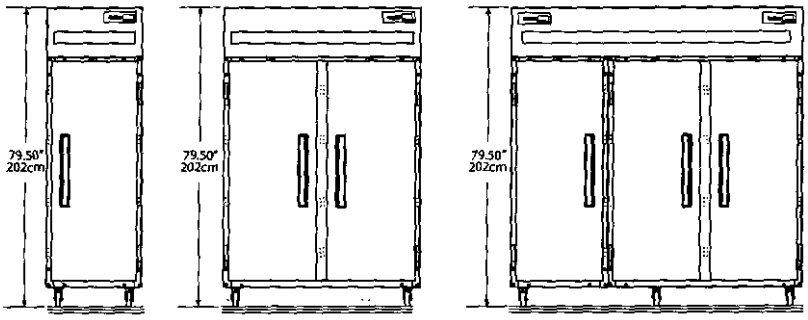

Elevation View 6025XL-S & 6025XL-SR | Elevation View 6051XL-S & 6051XL-SR | Elevation View 6076XL-S & and 6076XL-SR

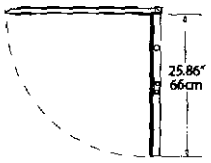

Door Clearance Detail
All Models

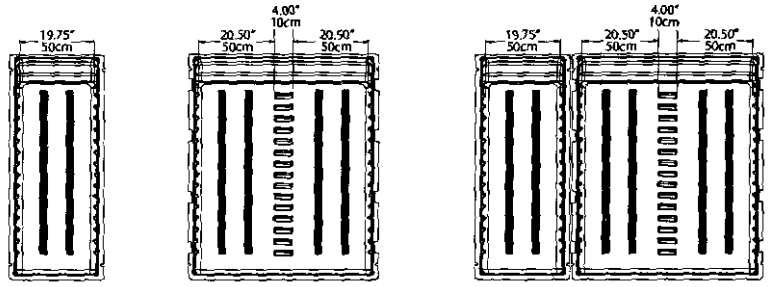

Interior Elev. View 6025XL-S & 6025XL-SR | Interior Elev. View 6051XL-S & 6051XL-SR | Interior Elev. View 6076XL-S & and 6076XL-SR

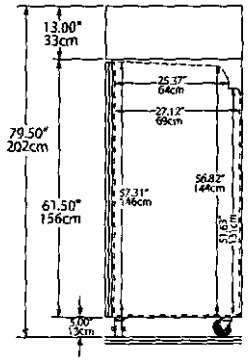

Typical End/Section View
All Models

6000XL Solid Door Reach-in Refrigerators

Specifications

Model	Voltage	Amps	Volume FT³	Shelf Capacity FT²	H.P.	BTU	Ship Weight	Nema Plug	Energy (KWH/Day)
6025XL-S	115	6.0	20.0	15.1	1/4	2092	274lbs/124kg	5-15P	2.48
6025XL-SH	115	6.0	20.0	15.1	1/4	2092	274lbs/124kg	5-15P	2.70
6051XL-S	115	8.0	43.5	33.2	1/3	2488	454lbs/206kg	5-15P	3.61
6051XL-SH	115	8.0	43.5	33.2	1/3	2488	454lbs/206kg	5-15P	3.74
6076XL-S, SH	115	16.0	66.5	48.3	1/4, 1/3	2092/2488	622lbs/282kg	5-20P	5.47

Remote units supplied with: Evaporator coil, solenoid valve, expansion valve, and temperature control. Condensing units to be sized and supplied by others.

Remote Model	Voltage	Amps	Volume FT³	Shelf Capacity FT²	H.P.*	BTU	Ship Weight	Nema Plug	Energy (KWH/Day)
6025XL-SR, SHR	115	2.0	20.0	15.1	1/4	2092	274lbs/124kg	5-15P	N/A
6051XL-SR, SHR	115	3.0	43.5	33.2	1/3	2488	454lbs/206kg	5-15P	N/A
6076XL-SR, SHR	115	4.0	66.5	48.3	1/4, 1/3	2092/2488	622lbs/282kg	5-20P	N/A

*Recommended; will vary with refrigerant used, contact factory.

Delfield reserves the right to make changes to the design or specifications without prior notice.

980 S. Isabella Rd.
Mt. Pleasant, Michigan 48858

Phone: 800-733-8948 or 989-773-7981
Fax: 800-669-0619
www.delfield.com

Printed in the U.S.A.
D56000XLS
03/13

Manitowoc

VICTORY
110 Woodcrest Road, Cherry Hill, NJ 08003-3648
856.428.4200 • 800.523.5008 • Fax: 856.428.7299
www.victoryrefrigeration.com • email: sales@victoryrefrigeration.com

PROJECT: _____
LOCATION: _____
ITEM #: _____
QUANTITY: _____

V-SERIES™

SOLID DOOR TOP MOUNT REACH-IN REFRIGERATORS

STANDARD FEATURES

- New V-SERIES Electronic Control with SUPERCOOL Mode
- High Performance, Balanced, Top-Mounted Refrigeration
- Unique Magnetic Proximity Door Switch Activates Lighting
- Anti Corrosion Coated Evaporator Coil
- Stainless Steel Front and Wrap Around Sides
- Aluminum Interior and Floor
- Environmentally Safe R-134a Refrigerant
- 2.5" Min. Foamed-in-Place Polyurethane Insulation
- Self-Closing Doors with 120° Hold Open Feature
- One Piece, Snap-In Magnetic Door Gasket(s)
- Door Lock(s) Standard
- Sleek, Ergonomic, Easy Grip Horizontal Door Handle(s)
- Three (3) Epoxy Coated Wire Shelves per Section
- Accommodates 18" X 26" or 12" X 20" pans
- 6" Overall Height Casters (Set of 4)
- Cam-Lift Hinges, Guaranteed for Life
- Recessed Interior Incandescent Lighting
- 10' Cord and Plug (See Electrical Data for Details)

OPTIONS AND ACCESSORIES

- Change Door Swing
- Expansion Valve Technology
- Fluorescent Lighting (Standard on Glass Door Models)
- LED Lighting
- Stainless Steel Finished Back
- 6" Legs in Lieu of Casters
- 4" Overall Height Casters (Set of 4)
- Kit with Universal Pan Slides
- Kit with Rod Type Pan Slides
- Kit with Angle Type Pan Slides
- 220/50 Hz, 220/60 Hz Voltages
- Remote Models (Standard with Legs)
- Extended Warranty
- Extra Shelves

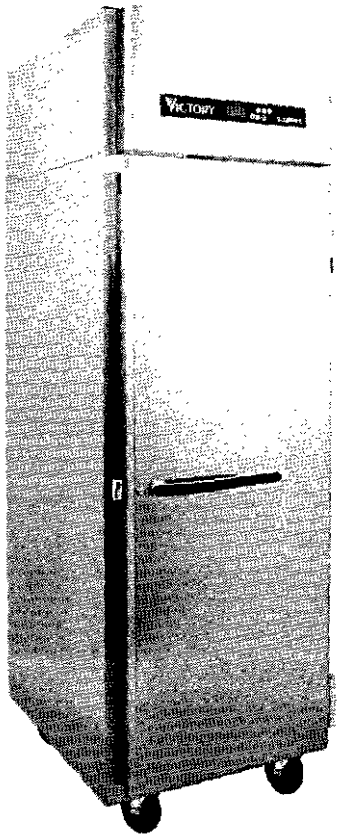

VR-SA-1D-HD

MODELS		
	FULL-DOOR	HALF-DOOR
SOLID DOOR	VR-SA-1D*	VR-SA-1D-HD
	VR-SA-2D*	VR-SA-2D-HD
	VR-SA-3D*	VR-SA-3D-HD

* Noted models are ENERGY STAR® listed. Please refer to www.energystar.gov to view the most up-to-date product listing and performance data.

3 Year Parts and Labor Warranty • 5 Year Compressor Warranty

Victory Refrigeration specification sheets are available online at **www.victoryrefrigeration.com**

APPROVALS:

VICTORY

SOLID DOOR TOP MOUNT REACH-IN REFRIGERATORS

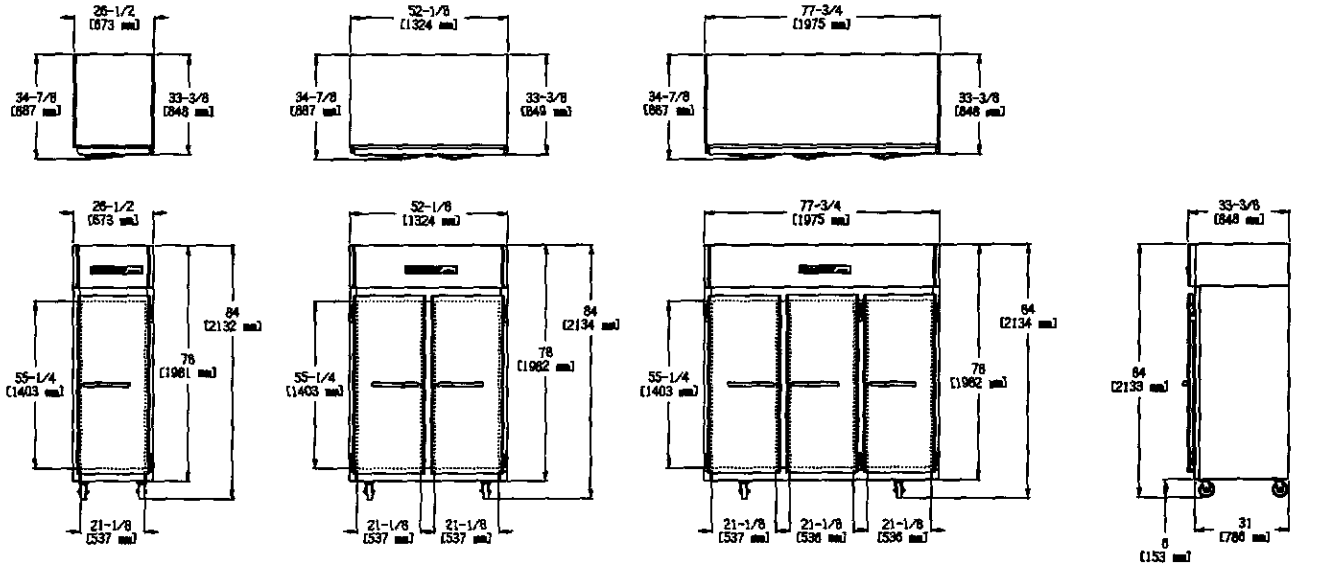

We reserve the right to change specifications and product design without notice. Such revisions do not entitle the buyer to corresponding changes, improvements, additions or replacements for previously purchased equipment.

Dimensional tolerances +/- ¼". Metric dimensions (MM)

V-SERIES CABINET CONSTRUCTION

The cabinet front, doors, grills and sides are constructed of polished stainless steel with the inside walls and bottom in aluminum. There is a minimum of 2.5" Polyurethane foam insulation throughout (3.5" on the bottom) to ensure energy efficiency. The front grill is removable (snap-on / snap-off, no tools required) allowing easy access for cleaning the condenser. Standard lighting is recessed incandescent on solid doors and fluorescent on glass door models.

V-SERIES DOOR CONSTRUCTION

The solid doors are constructed with a heavy gauge, polished stainless steel exterior and a durable ABS plastic liner. Each solid door is provided with a lock and an ergonomically correct handle. A unique magnetic proximity door switch controls the lighting on the solid door models. Cam-lift door hinges are self-closing and have a hold-open feature at 120°. Snap in place, one piece magnetic gasket(s). One section cabinets feature field reversible doors. Two and three section cabinets can have their door swing reversed at the time of order (right hinging standard).

V-SERIES REFRIGERATION SYSTEM

All components of the high efficiency, air-cooled, self-contained refrigeration system are mounted on top of the cabinet out of the food storage zone thereby providing greater useable storage space. Environmentally friendly R-134a refrigerators are metered by a capillary tube system providing a constant, safe operating temperature and quick recovery under most conditions. The temperature range on the V-SERIES Electronic Control is 32°F to 41°F for refrigerators. Each cooling coil has an anti-corrosion coating and all units feature an energy efficient hot gas condensate evaporation system.

V-SERIES INTERIOR STORAGE ARRANGEMENTS

Each cabinet section is provided with three (3) heavy-duty, epoxy coated shelves. The shelves are adjustablie in one inch increments. A wide door opening allows for the use of a variety of optional pan slide configurations (18" x 26" and 12" x 20").

V-SERIES ELECTRONIC CONTROL SYSTEM

The easy to use V-SERIES Control is state of the art with many exclusive features including ***SUPERCOOL Mode***, ***Energy Saving Mode***, multiple audible and visual alarms (minimum temperature, maximum temperature, door ajar, probe failure, clean condenser and compressor protection). Maintains three most recent alarms in memory. SUPERCOOL Mode runs the compressor constantly for a pre-determined amount of time or until a lower set-point has been reached. Energy Saving Mode activates automatically when there are no door openings for a pre-determined period of time.

CHARACTERISTICS	1 SECTION	2 SECTION	3 SECTION
DIMENSIONAL DATA			
Width, Overall (in.)	26 ½	52 ⅛	77 ¾
Depth, Overall (inc. Handles)	34 ⅞	34 ⅞	34 ⅞
Height Overall (inc. 5" Casters)	84	84	84
Depth, Door(s) Open 90° (in.)	56 ¾	56 ¾	56 ¾
Clear Door Opening, Width (in.)	21 ⅛	21 ⅛	21 ⅛
Clear Full-Door Opening, Height (in.)	55 ¼	55 ¼	55 ¼
Clear Half-Door Opening, Height (in.)	25 ⅝	25 ⅝	25 ⅝
Capacity Net (cu. ft.)	21.5	46.5	70.1
No. of Full Doors	1	2	3
No. of Half Doors	2	4	6
No. of Shelves	3	6	9
Shelf Area (sq. ft.)	17.1	36.0	54.2
ELECTRICAL DATA			
Cabinet Voltage	115/60/1	115/60/1	115/60/1
Feed Wires	2	2	2
Condensing Unit Voltage	115/60/1	115/60/1	115/60/1
NEMA Plug	5-15P	5-15P	5-20P
Total Amperes	9.8	10.7	13.8
REFRIGERATION DATA			
BTUH (@ 90°F AMB and -10°F EVAP)	2360	2360	3370
Condensing Unit Size (HP)	1/3 HP	1/3 HP	1/2 HP
Refrigerant	R-134a	R-134a	R-134a

NOTE: Plug style, voltage and full load amps may vary depending on certain options selected such as special voltages and compressor upgrades.

REMOTE APPLICATIONS: See form V-RRDS1 for remote refrigeration characteristics by model.

CRATED DIMENSIONS & WTS.	HT.	WIDTH	DEPTH	FT³	LBS
ONE SECTION	84 ½	36	43	75.70	305
TWO SECTION	84 ½	59 ¼	43	124.59	435
THREE SECTION	84 ½	86 ½	43	181.89	585

NOTE: In order to provide peak operating performance the cabinet must have a 2 inch all around clearance and 12 inches above the top of the condensing unit. This ensures an adequate air supply and space for routine maintenance and/or service if required.

When ordering please specify: Voltage, Hinging, Door Size, Options and Any Extended Warranty.

Copyright March 2013
Printed in USA

VICTORY
110 Woodcrest Road, Cherry Hill, NJ 08003-3648
856.428.4200 • 800.523.5008 • Fax: 856.428.7299
www.victoryrefrigeration.com • email: sales@victoryrefrigeration.com

PROJECT: _____
LOCATION: _____
ITEM #: _____
QUANTITY: _____

ULTRASPEC™ SERIES

ROLL-IN REFRIGERATORS

ULTRASPEC V-TEMP CONTROL™

STANDARD FEATURES

- V-TEMP™ Electronic Control System
- High Performance, Balanced, Top-Mounted Refrigeration
- Environmentally Safe R-134a Refrigerant
- Energy Efficient, Dual-Speed EC Evaporator Fan Motor(s)
- Plasticized Evaporator Fin Coils
- Non-Electric Condensate Evaporator
- Foamed-in-Place Polyurethane Insulation
- Heavy Duty Cylinder Locks
- Self-Closing Doors with 120° Hold Open Feature
- Cam-Lift Hinges, Guaranteed for Life
- Ergonomically Correct Door Handles, Guaranteed for Life
- Adjustable Door Wiper Gasket(s)
- Stainless Steel Floor
- Hinged Front Shroud Makes Condenser Cleaning Easier
- Proximity Door Switch Activates Interior Lighting
- One Piece, Snap-In Magnetic Door Gasket(s)
- Anti-Condensate Door Perimeter Heaters
- Stainless Steel Interior Door Liner
- Energy Saving Thermal Breaker Caps, Guaranteed for Life
- Removable Ramps
- Accepts Mobile Storage Racks up to 27" W x 29" D x 64.5" H
- Cord and Plug (see electrical for details)

OPTIONS AND ACCESSORIES

- Full Size Glass Doors
- Change Door Swing
- Remote Models
- Correctional Facilities Options
- Stainless Steel Case Back and Shroud
- Fluorescent Lighting
- LED Lighting
- Stainless Steel Wire Shelves
- Shelf Pilaster Strips
- Exterior Laminate Décor
- Optional Voltages
- ***FLEXTEMP*** Performance Mode
- USB Data Recorder
- RS-485 Serial Interface
- Two (2) Year Service Warranty

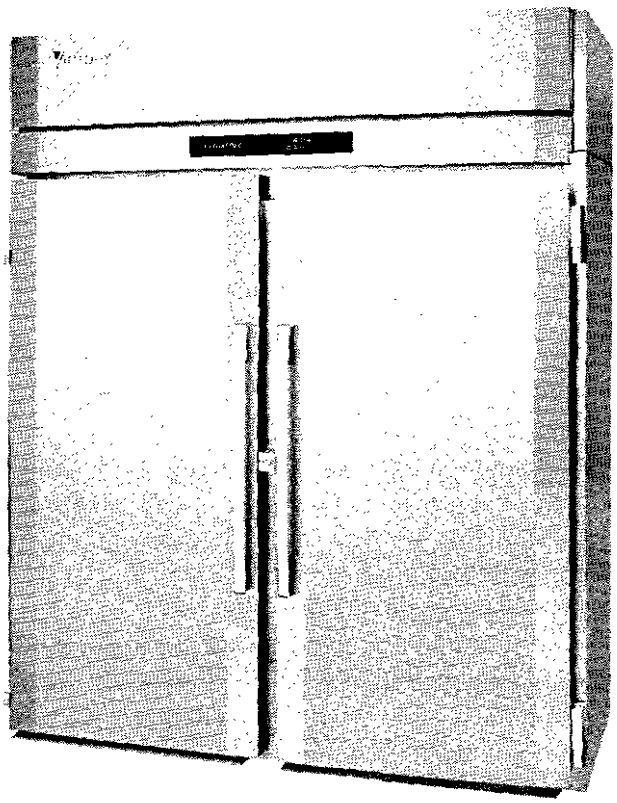

RIS-2D-S1

MODELS

LONG-DOOR

S SERIES — Stainless Steel Exterior and Interior
RIS-1D-S1
RIS-2D-S1
RIS-3D-S1

SA SERIES — Stainless Steel Exterior and Aluminum Interior
RISA-1D-S1
RISA-2D-S1
RISA-3D-S1

A SERIES — Stainless Steel Front and Doors, Aluminum Ends and Interior
RIA-1D-S1
RIA-2D-S1
RIA-3D-S1

NOTE: Not all marks refer to all models

1 Year Parts and Labor Warranty • 5 Year Compressor Warranty
2 Year V-TEMP™ Control Warranty

Victory Refrigeration specification sheets are available online at **www.victoryrefrigeration.com**

APPROVALS:

VICTORY — ROLL-IN REFRIGERATORS

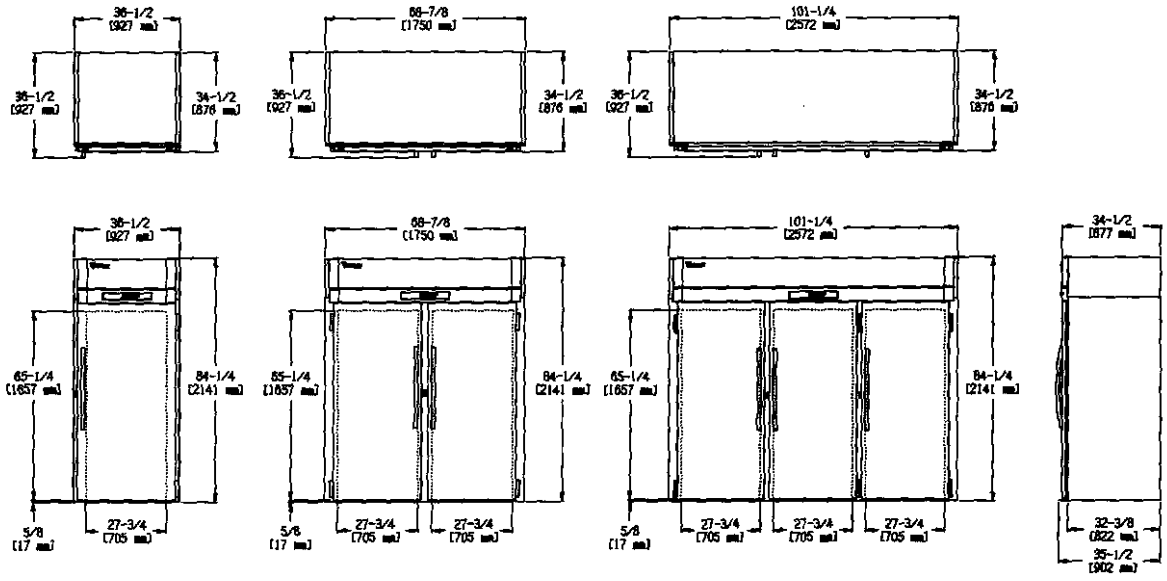

We reserve the right to change specifications and product design without notice. Such revisions do not entitle the buyer to corresponding changes, improvements, additions or replacements for previously purchased equipment.

Dimensional tolerances +/- ¼". Metric dimensions (MM)

CABINET CONSTRUCTION
The cabinet front and doors are constructed of heavy gauge, polished stainless steel to maintain an attractive appearance after years of heavy use. Polyurethane foam insulation throughout ensures the ultimate in energy efficiency. The front shroud lifts up for easy access when cleaning the condenser unit.

DOOR CONSTRUCTION
The doors are heavy gauge, polished stainless steel with a stainless steel interior liner. Each door is provided with a cylinder lock and ergonomically correct vertical handle. The door hinges are self-closing and have a hold-open feature at 120° which facilitates product loading. Proximity switches energize the recessed interior incandescent lighting when the door is opened. Humidity control wires around the door jamb prevent condensation from forming on the front of the cabinet in high humidity environments. The wires are concealed by a high impact, non-conducting thermal breaker cap.

REFRIGERATION SYSTEM
All components of the high efficiency, air-cooled, self-contained refrigeration system are mounted on top of the cabinet out of the food storage zone providing greater usable storage space. Environmentally friendly R-134a refrigerant is efficiently metered by a capillary system providing a constant, safe operating temperature and quick "recovery" under the most demanding conditions. The hermetically sealed systems are designed to operate at 38°F. Each cooling coil has plasticized fin coils to resist food acids and dual-speed EC fan motor(s) for greater cooling capacity and efficiency. All condensate water is disposed of automatically by the energy efficient, non-electric condensate evaporator.

INTERIOR STORAGE ARRANGEMENTS
Each door opening accepts a mobile storage rack measuring up to 27" W x 29" D x 64.5" H. Optional shelf pilasters and wire shelves are available.

V-TEMP™ CONTROL SYSTEM
The easy to use V-TEMP™ Control is provided standard with a two year parts and labor warranty. This durable, water resistant microprocessor monitors and controls the entire temperature maintenance process. It includes an ON/OFF switch, manual defrost, interior light switch, LED temperature indicator in °C or °F, a HI/LO audio/visual temperature alarm, power supply interruption, door ajar and "clean condenser" alarms. A manager's "lock-out" feature is provided to safeguard pre-determined control settings. A HAACP Event Indicator/Memory feature announces and records up to nine (9) alarm events. Unique to the V-TEMP™ are two standard modes of operation:

- SUPERCOOL - Provides a lower "set-point" refrigeration condition for a set period of time when food has just been loaded into the refrigerator and needs to be quickly brought back down to a safe temperature.
- ENERGY SAVER - The cabinet automatically reverts to the energy saving mode when there are no door openings for four hours.

A FLEXTEMP mode of operation is available as an option. FLEXTEMP provides the ability to select a unique temperature from 28°F to 40°F. This optional feature is ideal for seasonal menu changes and items with specific temperature requirements for dairy, meat, fish or poultry.

CHARACTERISTICS	1 SECTION	2 SECTION	3 SECTION
DIMENSIONAL DATA			
Capacity Net (cubic ft.)	33.6	67.2	100.9
Width, Overall (in.)	36 ½	68 ⅞	101 ¼
Depth, Overall (inc. handles)	36 ½	36 ½	36 ½
Depth, Door(s) Open 90°	65 ¼	65 ¼	65 ¼
Clear Door Width (in.)	27 ¾	27 ¾	27 ¾
Clear Full-Door Height (in.)	65 ¼	65 ¼	65 ¼
Height Overall	84 ¼	84 ¼	84 ¼
No. Full Doors	1F	2F	3F
ELECTRICAL DATA			
Cabinet Voltage	115/60/1	115/60/1	115/60/1
Feed Wires	2	2	3
Condensing Unit Voltage	115/60/1	115/60/1	208-230/60/1
NEMA Plug	5-15P	5-15P	NO
Total Amperes	9.4	10.1	10.2
REFRIGERATION DATA			
Condensing Unit Size	⅓ HP	½ HP	¾ HP
Refrigerant	R-134a	R-134a	R-134a

NOTE: Plug style, voltage and full load amps may vary depending on certain options selected such as optional voltages and compressor upgrades.

REMOTE APPLICATIONS
See form V-RRDS1 for remote refrigeration characteristics by model

CRATED DIMENSIONS & WTS.	HT.	WIDTH	DEPTH	CU. FT.	LBS
ONE SECTION	88 ¼	42	43	92.23	390
TWO SECTION	88 ¼	74	43	162.51	630
THREE SECTION	88 ¼	107	43	234.98	815

NOTE: In order to provide peak operating performance the cabinet must have a 2 inch all around clearance and 12 inches above the top of the condensing unit. This ensures an adequate air supply and space for routine maintenance and/or service if required.

Copyright February 2012
Printed in USA

Item # _____ C.S.I. Section 11420

STEAM

C24EA FLOOR SERIES
ELECTRIC CONVECTION STEAMER ON CABINET BASE

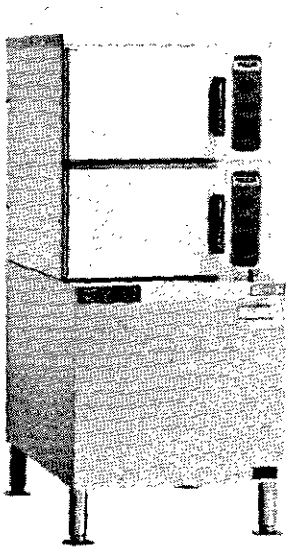

Model C24EA6

- ☐ **C24EA6-BSC** 6 pan capacity basic controls
- ☐ **C24EA6-DLX** 6 pan capacity professional controls
- ☐ **C24EA10-BSC** 10 pan capacity basic controls
- ☐ **C24EA10-DLX** 10 pan capacity professional controls

STANDARD FEATURES

- Stainless steel exterior.
- Two stainless steel cooking compartments with coved interior corners.
- Stainless steel steam generator with staged water fill, and Smart Drain System (timed drain) with PowerFlush.
- Separate 60 minute timer with constant steam feature for each compartment.
- Heavy duty doors and door latch mechanisms with gasket guard.
- Stainless steel water resistant cabinet base with enclosed bottom.
- 6" adjustable stainless steel legs with flanged feet.
- Shipped for 208/60-50/3 electrical service. Can be field converted to 208/60-50/1 and 240/60-50/3 and 240/60-50/1.
- Split water line connection. Treated and untreated water connections. 1½" NPT drain connection.
- One year limited parts and labor warranty.

OPTIONS

- ☐ Professional Control Package includes:
  - Superheated Steam System
- ☐ 480 volt, 50/60 Hz, 3 phase (Professional Control Package only).
- ☐ Steamer Security Package, includes controls protected by lockable cover, perforated flue cover, security fasteners & tack-welds.
- ☐ Second year extended limited parts and labor warranty contract.

ACCESSORIES (Packaged & Sold Separately)

- ☐ 12" x 20" stainless steel pans:
  - 1" deep (solid)(perforated) Qty.____.
  - 2½" deep (solid)(perforated) Qty.____.
  - 4" deep (solid)(perforated) Qty.____.
- ☐ Stainless steel pan cover. Qty.____.
- ☐ Removable sliding shelf. Qty.____.
- ☐ Water treatment system.

SPECIFICATIONS

Two compartment electric convection steamer on cabinet base, Vulcan-Hart Model No. (C24EA6-BSC) (C24EA10-BSC). Stainless steel exterior. Two stainless steel cooking compartments with coved interior corners. Stainless steel steam generator with staged water fill and Smart Drain System (timed drain) with PowerFlush. Separate 60 minute timer with constant steam feature for each compartment. Heavy duty doors and door latch mechanisms. Stainless steel water resistant cabinet base with stainless steel enclosed bottom. 6" adjustable stainless steel legs with flanged feet. Shipped for 208/60-50/3 electrical service. Can be field converted to 208/60-50/1 and 240/60-50/3 and 240/60-50/1. Split water line connection. Treated and untreated water connections. 1½" NPT drain connection.

Exterior Dimensions:
6 pan: 24"w x 35.4"d x 58.5"h on 6" legs.
10 pan: 24"w x 35.4"d x 67.9"h on 6" legs.

UL listed. Classified by UL to NSF Std. #4.

VULCAN
a division of ITW Food Equipment Group LLC
P.O. Box 696 ▪ Louisville, KY 40201 ▪ Toll-free: 1-800-814-2028 ▪ Local: 502-778-2791 ▪ Quote & Order Fax: 1-800-444-0602

STEAM

C24EA FLOOR SERIES
ELECTRIC CONVECTION STEAMER ON CABINET BASE

SERVICE CONNECTIONS:

ELECTRICAL CONNECTION: Single point supply 1⅛" (29 mm) dia. (¾" conduit).

DRAIN: Condenser box, compartment and generator, 1½" NPT. (Provide an open air gap type drain within 12" of condenser box and for best results at a distance so steam vapors will not enter the steamer from underneath the control area. Do not connect solidly to any drain connection.)

GENERATOR WATER SUPPLY: ¾" (19 mm) male NSHT to generator, cold water flow rate .5 gpm @ minimum 20 to maximum 60 psi. (138-414 kPa).

CONDENSING WATER SUPPLY: ¾" (19 mm) male NSHT to condenser, cold water flow rate .5 gpm @ minimum 20 to maximum 60 psi. (138-414 kPa).

WATER QUALITY STATEMENT:

The fact that a water supply is potable is no guarantee that it is suitable for steam generation. Your water supply must be within these general guidelines:

SUPPLY PRESSURE	20 - 60 psig
HARDNESS*	less than 3 grains
SILICA	less than 13 ppm
TOTAL CHLORIDE	less than 4.0 ppm
pH RANGE	7-8
UN-DISSOLVED SOLIDS	less than 5 microns

* 17.1 ppm = 1 grain of hardness

Other factors affecting steam generation are iron content, amount of chloridation and dissolved gases. Water supplies vary from state to state and from locations within a state. Therefore it is necessary that the local water treatment specialist be consulted before the installation of any steam generating equipment.

NOTE:

- Dimensions which locate the above connections have a tolerance of + or -3" (+ or -75 mm). Normal dimensions are in inches. Dimensions in ( ) are in millimeters.
- Installation of backflow preventers, vacuum breakers and other specific code requirements is the responsibility of the owner and installer. It is the responsibility of the owner and installer to comply with local codes.
- Do not use plastic drains.
- This appliance is manufactured for commercial installation only and is not intended for home use.

COMPARTMENT PAN CAPACITY				
MODEL	1"	2½"	4"	6"
C24EA6	6	3	2	1
C24EA10	10	5	3	2

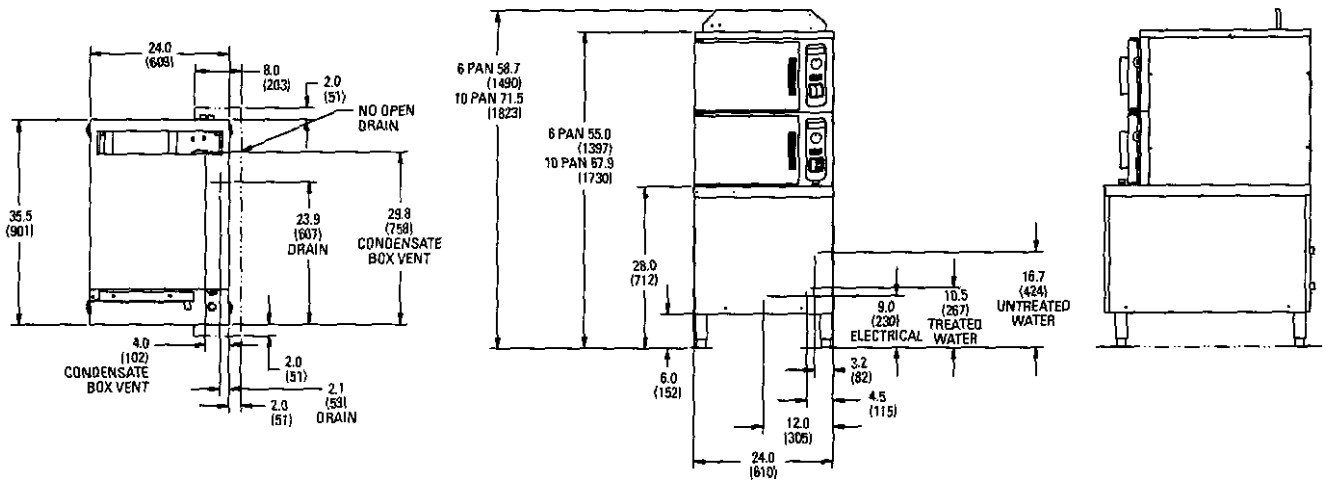

BASIC CONTROL PACKAGE							
		208 V		240 V		480 V	
MODEL	PH	KW	AMP	KW	AMP	KW	AMP
C24EA6-BSC	1	16.0	77	17.8	74	N/A	N/A
	3	16.0	44	17.8	51	16.0	19
C24EA10-BSC	1	24.0	115	24.9	104	N/A	N/A
	3	24.0	67	24.9	65	24.0	29

PROFESSIONAL CONTROL PACKAGE							
		208 V		240 V		480 V	
MODEL	PH	KW	AMP	KW	AMP	KW	AMP
C24EA6-DLX	1	16.9	81	19.0	79	N/A	N/A
	3	16.9	48	19.0	53	17.2	21
C24EA10-DLX	1	25.2	121	26.5	110	N/A	N/A
	3	25.2	72	26.5	67	25.6	32

NOTE: 3ø is an unbalanced load, and amps listed is the max on any leg. Refer to the Installation and Operation Manual for further details.

VULCAN
a division of ITW Food Equipment Group LLC
P.O. Box 696 ■ Louisville, KY 40201 ■ Toll-free: 1-800-814-2028 ■ Local: 502-778-2791 ■ Quote & Order Fax: 1-800-444-0602

NOTE: In line with its policy to continually improve its products, Vulcan reserves the right to change materials and specifications without notice.

Item # _____ C.S.I. Section 11420

STEAM

VULCAN

SCALEBLOCKER™ WATER FILTER SYSTEM

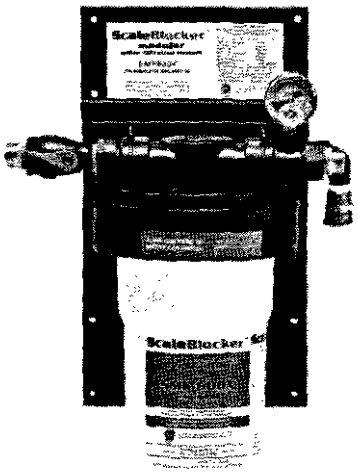

Model SMF600

System tested and certified by NSF International	
NSF	• ANSI/NSF Standard 53–Health Claims - Cysts Reduction: Cryptosporidium, Giardia, Entamoeba - Turbidity Reduction • ANSI/NSF Standard 42–Aesthetic Claims - Chlorine Reduction, Class I - Taste and Odor Reduction

SPECIFICATIONS

Water filter system, Vulcan Model No. SMF_____. Single quick connect cartridge design. Patented technology reduces lime scale, chlorine, and chloramines without chemicals or additives. Reduces the need of frequent deliming. Modular mounting bracket and head assembly with ¼ turn quick connect cartridge. Shutoff valve and connection for treated water for generator and untreated for cold water condensate. Filter water test port with shut off valve. Incoming water parameters are 40-125 PSI, 45-100°F, PH 6-9, alkalinity 80-100 PPM, chlorine/chloramines 0-4 PPM. chlorides 0-30 PPM, hardness 0-300 PPM (0 to 17.5 grains). Water connections are ¾" NPTM with ¾" Male GHT.

Exterior Dimensions:
SMF600: 15½"w x 9½"d x 18½"h
SMF620: 15½"w x 9½"d x 29½"h

NSF tested and certified.

- ☐ **SMF600** Water Filter System
- ☐ **SMF620** Water Filter System

STANDARD FEATURES

- Single cartridge design
- ¼ turn cartridge quick disconnect and connect for easy changes, no wrench required
- Category 3 recyclable cartridge
- Nano crystal scale reduction reduces the need for deliming
- Hollow carbon for chlorine/chloramines removal
- Modular mounting bracket and head assembly
- Quick connect inlet and outlet assemblies for reversing flow or adding optional pre-filter.
- Shut off valve and pressure gauge standard
- Connections are ¾-inch NPTF with ¾-inch Male GHT adaptors installed (male garden hose thread)
- Filtered water test valve
- Unfiltered water connection for cold water condensate with cap if not used
- Free filter maintenance reminders when system is registered with Vulcan
- Treats water up to 300 PPM (17.5 grains), hardness
- Removes up to 4 PPM chlorine/chloramines

ACCESSORIES (Packaged & Sold Separately)

- ☐ Preventive maintenance kit
- ☐ Stainless steel flex water connection hose 72", ⅔" Female GHT, (garden hose thread), each end.
- ☐ 14" deliming tank and dip tube for steamers without deliming port
- ☐ Case deliming agent, 24 14 oz. bags
- ☐ Pre-filter kit for high turbidity water, extends life of scale reduction filter
- ☐ Pre-filter cartridge replacement, sediment only
- ☐ Pre-filter cartridge replacement, sediment and chlorine/chloramines

VULCAN
a division of ITW Food Equipment Group LLC
P.O. Box 696 ■ Louisville, KY 40201 ■ Toll-free: 1-800-814-2028 ■ Local: 502-778-2791 ■ Quote & Order Fax: 1-800-444-0602

STEAM

SCALEBLOCKER™
WATER FILTER SYSTEM

NOTES:

1. Dimensions which locate the below connections have a tolerance of + or - 3" (+ or - 77mm).

SMF600

Service Flow	0-2 GPM
Service Life	7,500 Gal
Inlet / Outlet	¾" NPTF inlet and ¾" Male GHT (¾" NPTF adapter) outlet
Inlet Min / Max Pressure	40-125 PSIG
Min / Max Temperature	45-100F (7-37C)
Weight, Operating	21 Lbs. (9.5 kg)

SMF620

Service Flow	0-4 GPM
Service Life	12,000 Gal
Inlet / Outlet	¾" NPTF inlet and ¾" Male GHT (¾" NPTF adapter) outlet
Inlet Min / Max Pressure	40-125 PSIG
Min / Max Temperature	45-100F (7-37C)
Weight, Operating	32 Lbs. (15.5 kg)

2. Installation of backflow preventers, vacuum breakers, other code requirements and local code compliance is the responsibility of the owner and installer.
3. Filter clearance needed for access:
   Front 13"
   Bottom 4"
4. This appliance is manufactured for commercial installation only and not intended for home use.

WATER QUALITY STATEMENT:
Water from ScaleBlocker™ System should only be connected to the boiler / generator feed and not the condenser connection of the steamer. Systems are not to be used where water is microbiologically unsafe or with water of unknown quality without adequate disinfections before and after use. Connecting to a municipal water supply complies with this requirement.

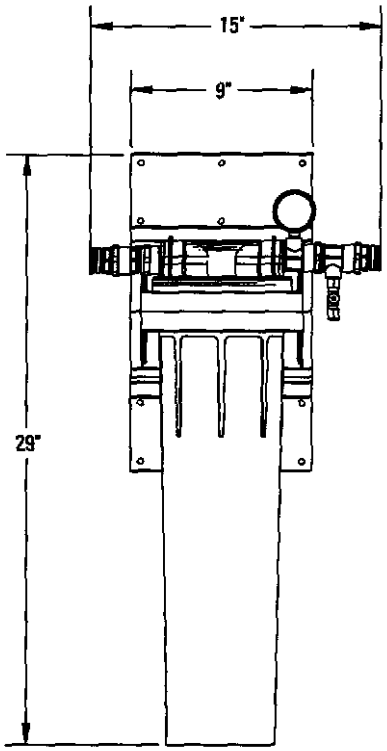

SMF620-SYSTEM

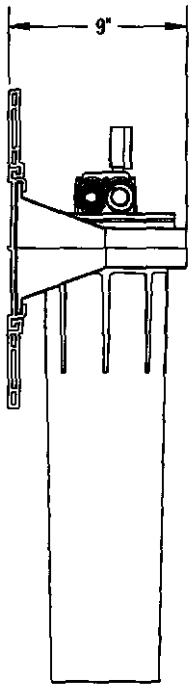

TYPICAL SIDE VIEW

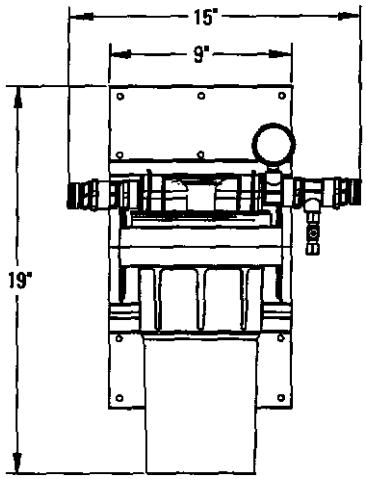

SMF600-SYSTEM

a division of ITW Food Equipment Group LLC
P.O. Box 696 ■ Louisville, KY 40201 ■ Toll-free: 1-800-814-2028 ■ Local: 502-778-2791 ■ Quote & Order Fax: 1-800-444-0602

NOTE: In line with its policy to continually improve its products, Vulcan reserves the right to change materials and specifications without notice.

Electric Two Compartment Convection Steamer on Cabinet Base

Job _____ Item# _____

Model	Compartments	Capacity
SX-34EC	2	1-7 Pans
SX-55EC	2	1-10 Pans

Standard Features

- Automatic generator blow down
- Delime mode power setting
- Deliming port for each generator, which is located on the rear of the unit.
- Split water connections for simple hook up for a treated water system.
- 28" high stainless steel construction cabinet base with operable door for storage.
- Two electric, stainless steel generators operating at 0 psi (0 kPa) with field replaceable element rated at:
  SX-34EC - 7.5kW + 10kW
  SX-55EC - 15 kW + 15kW

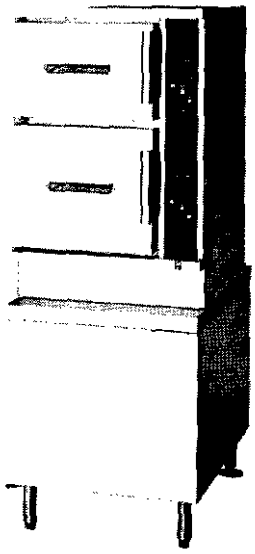

SX-55EC

CONSTRUCTION SPECIFICATIONS

Southbend Convection Steamer with individual steam generator for each cavity. C-CSA-US Certified and NSF Approved. Model SX-34EC shall have 3 pan capacity on top and 4 pan capacity on bottom. Model SX-55EC shall have 5 pan capacity on top and bottom. The steamer shall be constructed of a satin finish stainless steel #304. The cooking chamber is a one piece all welded, #316 stainless steel with coved corners. The heavy duty door shall have an inner liner of stainless steel with a full perimeter gasket seal, an outer liner of one piece all welded stainless steel, and a positive lock and seal mechanism with spring release. Each compartment shall be provided with removable stainless steel pan supports. A stainless steel drip trough shall be integrally connected to drain to collect condensate when the doors are opened.

The control housing shall be constructed of stainless steel with a full access removable panel. Each compartment shall have individual controls which include an illuminated three way power switch (ON/OFF/Delime), a pilot ready light, a pilot cooking light, a 60-minute electric timer which sounds an audible signal at the end of the cooking cycle, and solid state generator controls for each generator. Steam flow to the cooking chamber shall be cut off when the door is opened and reactivated when the door is closed.

WATER QUALITY STATEMENT

Water quality is the major factor affecting the performance of your appliance. If you are unsure of water quality, consult a local water treatment specialist and have the water analyzed. Your water supply must be within these general guidelines:

Total dissolved solids - less than 60 PPM
Total alkalinity - less than 20 PPM
Silica - less than 13 PPM
Chlorine -less than 1.5 PPM
pH Factor -7.0-8.5

Water which fails to meet these standards should be treated by installation of water conditioner.

FAILURE OR MALFUNCTION OF THIS APPLIANCE DUE TO POOR WATER QUALITY IS NOT COVERED UNDER WARRANTY

Models: ☐ **SX-34EC** ☐ **SX-55EC**

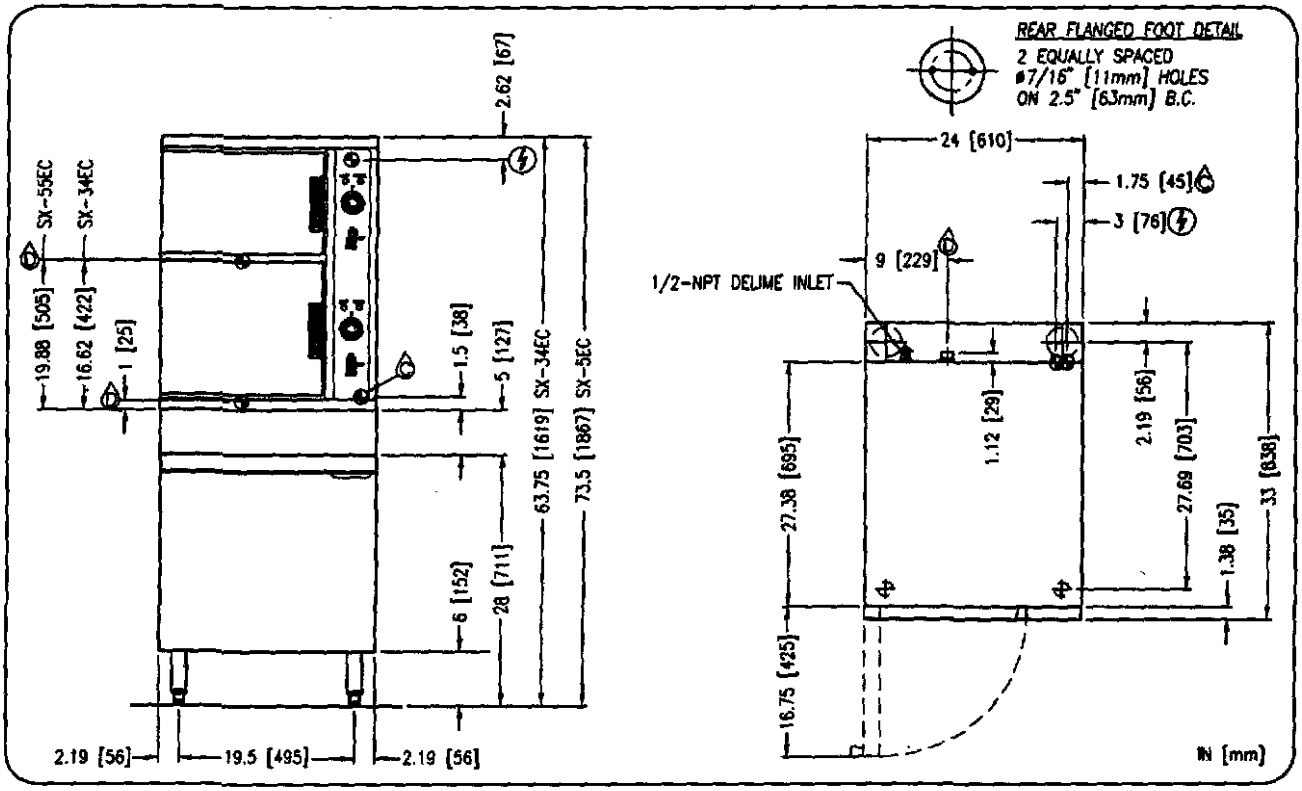

UTILITY CONNECTIONS

Two electrically heated, stainless steel steam generators operating at 0 psi (0kPa) and rated at:

SX-34EC - 7.5kW + 10kW

SX-55EC - 15kW + 15kW

Model	KW	Phase	Amps Per Line				
			208V	220V	240V	380V	480V
SX-34EC	17.5	3	49	46	42	26.6	21.1
SX-55EC	30	3	83.3	78.7	72.2	45.6	36.1

Controls:

- 208 VAC, 3 Phase, 50/60 Hz
- 220 VAC, 3 Phase, 50/60 Hz
- 240 VAC, 3 Phase, 50/60 Hz

Electrical: 1 1/8" hole for electrical connection. Rating to be as specified on data plate.

Drain: 1" IPS piped to open floor drain. No Solid Connection. 24" length before open air gap opening (no bends or elbows)

Generator Water: 3/8" O.D. tubing at 25-50 PSI (170-345 kPa)

Condensing Water: 3/8" O.D. tubing at 25-50 PSI (170-345 kPa)

OPTIONS/ACCESSORIES

- ☐ 380, 415, or 480 VAC, 3 Phase, 50/60 Hz Controls
- ☐ 220/380 or 240/415 VAC, 3 Phase, 50/60 Hz, 4 wire Controls
- ☐ 120 Minute Timer
- ☐ 12" x 20" pan guides for cabinet base
- ☐ Correctional Package

INTENDED FOR COMMERCIAL USE ONLY.
NOT FOR HOUSEHOLD USE.

SOUTHBEND
1100 Old Honeycutt Road, Fuquay-Varina, NC 27526
(919) 762-1000 www.southbendnc.com

SOUTHBEND

NSF COMPONENT

Multi-Compartment steamers & Combi-ovens

P/N 1190862

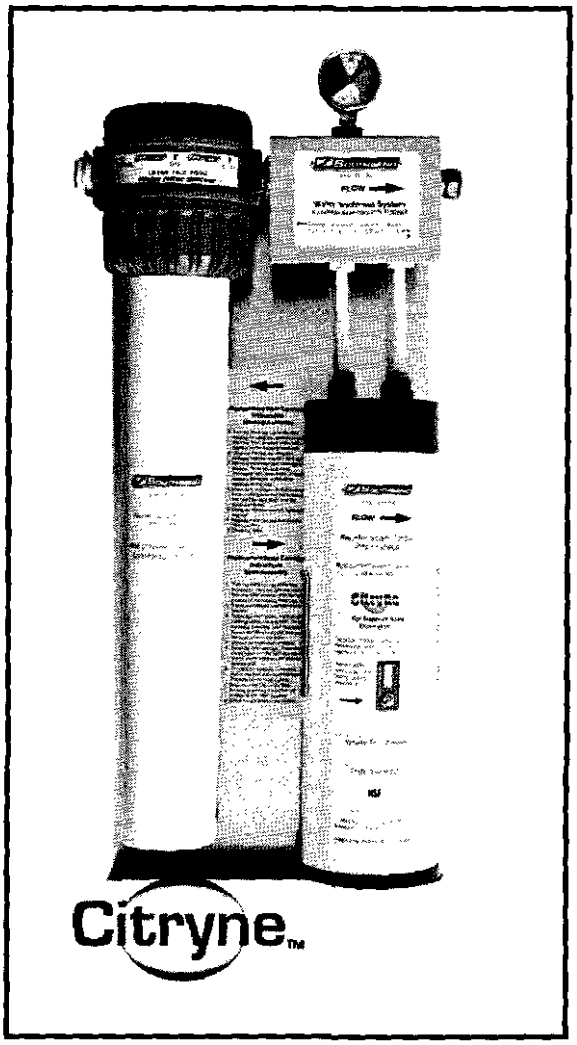

P/N 1190862

This Southbend water treatment system provides the necessary technology to control chlorine, sediment and to solve scale problems. Our water treatment system is effective in all water conditions.

QUICK FACTS

- Neutralizes scale
- Up to 99% chlorine reduction
- 5 micron filtration
- Easy cartridge change out
- Quick disconnect fittings
- 6 month cartridge life
- Guaranteed
- Efficient & affordable

Made in USA

This water treatment system meets the water quality requirements for alkalinity, pH and chlorine.

SPECIFICATIONS

Maximum pressure: 80 psi non shock
Maximum temperature: 100° F
Dimensions: 25" H x 11" W x5.0" D
Fittings: 1/2" NPT fittings at manifold
Flow rate: Up to 3 gallons per minute

Shipping weight: 23 lbs.
Cartidge life: Up to 6 months
Replacements: Stage 1 - P/N 1190865
Stage 2 - P/N 1190866
Patent Pending

110 Old Honeycutt Rd. • Fuquay-Varina, NC 27526 • 919-762-1000

Multi-compartment steamers & Combi-ovens
P/N 1190862

NSF COMPONENT

SCALE CONTROL

Calcium and Magnesium are the two minerals that form scale on heating elements which results in scale build up.

Scale build up on heating elements creates an environment where consistent and effective heating becomes nearly impossible.

As scale builds up in the equipment, the equipment becomes less efficient at heating the water and the element requires more time and energy consumption to generate the needed steam.

This Southbend water treatment system provides the necessary technology to solve scale problems. Our water treatment is effective in all water scale conditions.

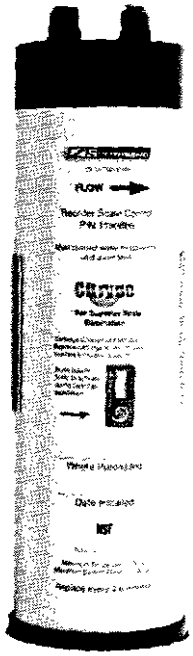

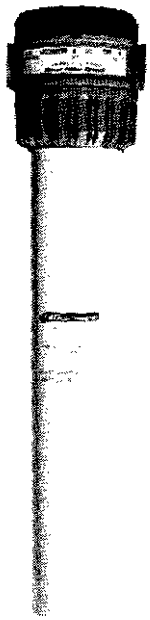

CORROSION CONTROL

Southbend water treatment provides the solutions for chlorine and sediment control. No other treatment can provide chlorine control more affordably or efficiently. All TERRY filter housings come complete with easy cartridge change out and our own easy to read filter life gauge.

The carbon block cartidges are great for displacing traditional GAC (Granulare Activated Carbon) and PAC (Powdered Activated Carbon) filters in applications where high chlorine reduction is needed. Our cartridges are able to compete with virtually all carbon blocks manufactured in the USA.

110 Old Honeycutt Rd. • Fuquay-Varina, NC 27526 • 919-762-1000

Scale Master Filter 2
P/N 1190862

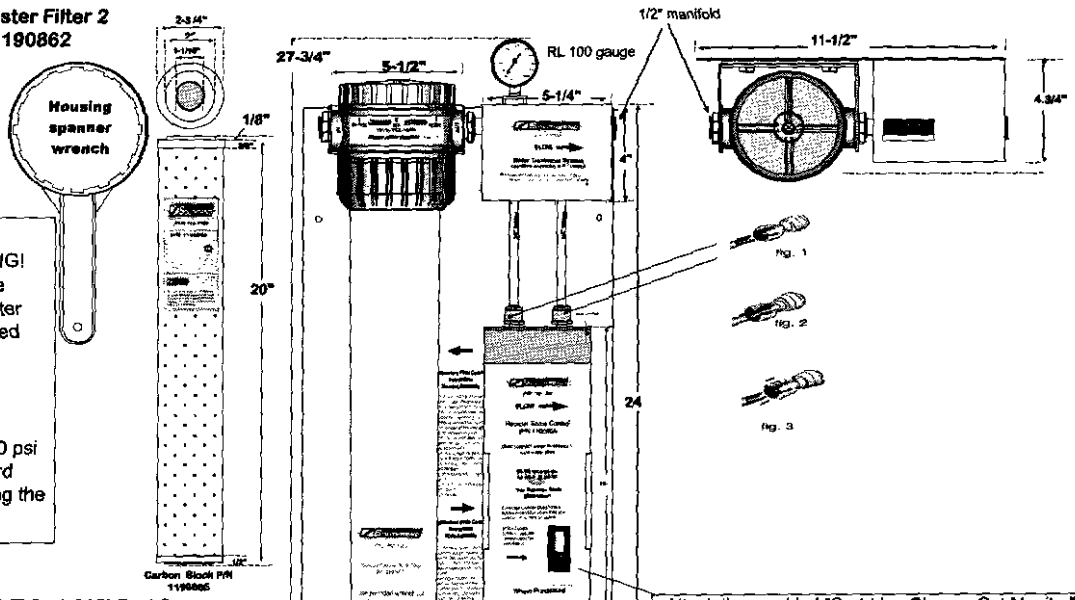

CAUTION!
READ BEFORE INSTALLING!
A pressure regulator MUST be installed before housing, if water pressure will at any time exceed the
MAXIMUM RATING OF
100 PSI (6.8 BAR).
It is recommended that the pressure regulator be set at 80 psi (5.6 bar) or less. This will guard against the pressure exceeding the maximum rating at any time.

Attach the provided "Cartridge Change Out Monitor" label to the replacement Cartridge. Peel off the blue "service filter" label adhesive & attach it to the right of the arrow on the "Cartridge Change Out Monitor" label. Press the bubble firmly on the "service filter" label to activate the 6 month timer.

INSTALLATION INSTRUCTIONS

The water treatment system is furnished with a mounting panel.

1. Turn off water supply line leading to the water treatment system.
2. Mount system on the wall vertically. The system MUST be mounted vertically to function properly. Use 1/4" mounting holes in the mounting panel.
3. Connect water supply line inlet 1/2" NPT female threaded head. **(Flush 5 gallons prior to use or until water flow is clear).** Connect line outlet to1/2" NPT female threaded manifold.
4. Turn on water to complete the installation. Check for leaks.

When to Replace Cartridges (P/N 1190862)
Replace cartridges every 4 to 6 months depending on the size the equipment and water usage.

Carbon Filter Replacement Instructions. Model: P/N 1190865

1. Turn black top to By-Pass or off (By-Pass will allow water to continue to flow to the rest of the water supply line while replacing the Cartridge). Use the Wrench provided if necessary.
2. Turn the bottom blue Collar counter clockwise and slide down to bottom of the Housing.
3. Slide the Housing away from the Head.
4. Remove the spent Cartridge and insert the Replacement Cartridge.
5. Inspect the O-Ring at the top of the Housing and replace if it appears worn.
6. Slide the Housing back under the Head and lift and tighten the Collar by turning clockwise. Secure the Collar with the Wrench provided.
7. Turn the black top to the filter to resume water flow.
8. Check for leaks. If leaks exist, confirm that the bottom Collar is tightened securely to the Head.
9. If leaks persist, return the black top to By-Pass or Off. Remove the Collar, slide the Housing away from the Head and check that the O-Ring is good condition and properly seated. Re-attach the Housing to the Head as before and repeat Steps 7-9.

Scale Cartridge Replacement Instructions. Model: P/N 1190866

1. Turn off water supply to the water system.
2. Remove expended cartridge from the bracket.
3. Disengage each plastic line from the cartridge fitting one at time. On the fitting, press the collet face fully toward the fitting body and then pull the tube out from the fitting body.
4. Discard expended cartridge.
5. Insert plastic tubes into cartridge fitting one at time until the tube ends hit a positive stop.
6. To check for a secure connection pull on the tube with moderate force. The tube should hold in place. Install new cartridge into the bracket.
7. Turn on water supply slowly. Check for leaks, before leaving installation.

When to Replace Cartridges (Order 1- Filter & 1- Scale)
Cartridges should be replaced every six months or when scale begins to form in the treated equipment.

1100 Old Honeycutt Rd, Fuquay-Varina, N.C. 27526 Phone: (919) 762-1000

112410

Cleveland

STEAMCRAFT® GENERATOR STYLE HIGH SPEED CONVECTION STEAMERS

Project _____
Item _____
Quantity _____
FCSI Section _____
Approval _____
Date _____

SteamCraft® Gemini™ 10

TWO COMPARTMENT FLOOR MODEL DESIGN
PRESSURELESS CONVECTION STEAMER
TWIN ELECTRIC STEAM GENERATORS, 16 KW EACH

MODEL: ☐ *24-CEA-10*

Cleveland Standard Features

- Cooking Capacity for up to ten 12″ x 20″ x 2½″ deep Cafeteria Pans, five each compartment.
- **Innovative *PowerPak* Electric Steam Generator:** Twin Vertical Atmospheric Electric Steam Generators operate independently. Two 8 KW Fire Bar Heating Elements per generator. Strong 14 Gauge Stainless Steel Construction. Large 5 gallon generator reservoir for each compartment for high speed steam cooking production. Two fully insulated rear mounted independent steam generators.
- Each steam-cooking compartment is independently operated and controlled by a separate stainless steel steam generator.
- **Easy Access Generator Cleaning Port:** Two Generator Cleaning Ports located on the outside, top of the unit.
- **Instant Steam Stand By Mode:** Hold generator at a steaming temperature. Allows unit to start cooking instantly.
- **Durable 14 Gauge, Stainless Steel Construction:** For compartment door, cavity and steam generator.
- **Two 60 Minute Electro-Mechanical Timers and Switches for manual operation:** Audible signal for cooking time completion. (MCS)
- **Main Power On/Off Switch:** Automatically fills generator with water, and then starts heating elements in generator.
- **Exclusive Steam Cooking Distribution System:** Exclusive Brass Steam Jets produce a high velocity convection steam without fans. Coved Corner design in cooking compartment distributes heat evenly, and is easy to clean. Creased top & bottom enhance drainage. Cold Water Condenser for each compartment maintains a dry steam. Fully Insulated cooking compartment for thermal efficiency. Removable Stainless Steel Slide Racks.
- **Automatic Generator Drain:** Contains a "Water Jet" Spray Rinse Drain Cleaning Cycle to keep drain clear.
- **Exclusive Automatic Probe for Water Level Control:** Separate from the generator for easy access, contains a high velocity rinse cycle to eliminate mineral build up.
- **Exclusive "Cool to the Touch" Two-Piece Compartment Door Design:** Free floating inner door with reversible gasket provides an air tight seal. Stainless Steel Slam/Latch Door Latch mechanism for reliability.
- **Condensate Drip Trough:** Provide under lower compartment door to collect condensate.
- **Left Hand Door Hinging:** Compartment Doors hinged on the left, controls on the right.
- **NSF Certified 6″ Stainless Steel Legs** with adjustable flanged feet for a one inch level adjustment.

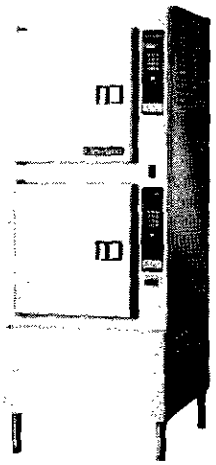

Shown with optional Electronic Timer

Short Form Specifications

Shall be Two Compartments, Cleveland Convection Steamer series **SteamCraft® Gemini™ 10**, *Model 24-CEA-10, Twin Electric Atmospheric Steam Generator, 32 KW input. Remote Probe Type Water Level Controls. Steam Generator with Automatic Water Fill on start up. Automatic Generator Blowdown, Two each 16.5 KW Fire Bar Heating Elements. Choice of Compartment Controls, Manual By Pass Operation Mode, Exclusive Cold Water Condenser design, Type 430 Stainless Steel exterior and cooking compartments.*

Options & Accessories

- ☐ Right hand Door Hinging, Controls on the Right (DHR)
- ☐ Electronic Timer with Compensating Load Feature (ETC)
- ☐ ON/OFF Steam Switch only for compartment controls (MC)
- ☐ 10″ Stainless Steel Legs (LF10)
- ☐ *Dissolve®* Descale Solution, 6 one gallon container w/quart markings (106174)
- ☐ Compartment Door Steam Shut Off Switch (SCS)
- ☐ Cafeteria Pans in depths of 1″, 2½″ and 4″
- ☐ Low Wattage Option, 8 KW each compartment (LWO)
- ☐ Water Filters

1333 East 179 St., Cleveland, Ohio, U.S.A. 44110
Tel: 1-216-481-4900 Fax: 1-216-481-3782
Web Site: www.ClevelandRange.com Email: Steam@ClevelandRange.com
Manitowoc

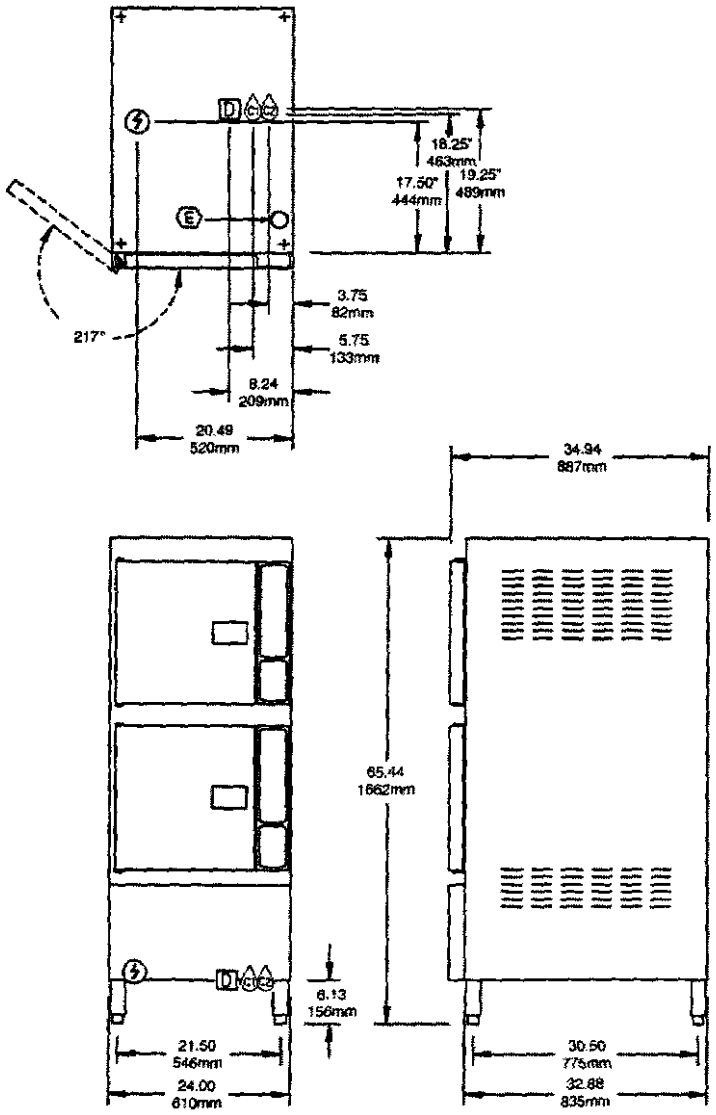

Each Compartment has capacity for:
- Five, 12″ x 20″ x 2½″ deep Cafeteria Pans.

WATER QUALITY REQUIREMENT

The quality of water varies greatly from region to region. *Steam equipment must be blown down daily and chemically descaled periodically to ensure proper operation.* To minimize service problems caused by the accumulation of minerals and chemicals in water, review the following quality guidelines with a local water treatment specialist. Inlet water that is beyond these specified guidelines should be treated to achieve the acceptable limits.

TOTAL DISSOLVED SOLIDS	less than 60 parts per million
TOTAL ALKALINITY	less than 20 parts per million
SILICA	less than 13 parts per million
pH FACTOR	greater than 7.5
CHLORINE	less than 30 parts per million

A typical water quality analysis can be secured from your local water district. Water that is potable does not guarantee compatibility with steam equipment.

ELECTRIC

STANDARD ELECTRIC

Volts	Watts	Ph	Amps	Wire
208	32,600	3	91.7	3
220	27,393	3	72.9	3
240	32,600	3	79.5	3
440	27,393	3	36.4	3
480	32,600	3	39.8	3
360	29,259	3	47.6	4
380	32,600	3	50.2	4
415	32,600	3	46.0	4

LOW WATTAGE OPTION

Volts	Watts	Ph	Amps	Wire
208	16,600	3	47.3	3
220	13,948	3	37.6	3
240	16,600	3	41.0	3
440	13,948	3	18.8	3
480	16,600	3	20.5	3
360	14,899	3	24.5	4
380	16,600	3	25.9	4
415	16,600	3	23.7	4

COLD WATER

35 psi minimum
60 psi maximum

- (C1) ⅜″ Dia. NPT for Generator (for water treatment connection)
- (C2) ⅜″ Dia. NPT for Condenser

DRAINAGE (D)

1½″ dia.

Do not connect other units to this drain

Drain must not be located beneath the steamer itself. Preferred floor drain location should be a minimum distance (from the unit) of at least 12" from the left side, 12" from the right side, 6" from the front and 6" from the rear

Do not use PVC pipe

CLEARANCE

Right - 3", Left - 3", Rear - 3"
(12" on control side if adjoining wall or equipment is over 30" high for service access)

Contact factory for variances to clearances.

TOTAL CAPACITY (2 Compartments)

10 — 12″ x 20″ x 2½″ Cafeteria Pans or
20 — 12″ x 20″ x 1″ Cafeteria Pans or
6 — 12″ x 20″ x 4″ Cafeteria Pans

UTILITY CONNECTIONS

- (A) Electrical Supply
- (B) Cold Water Supply for Condenser 3/8" Dia. NPT
- (C) Cold Water Supply for Generator and Water Injection. 3/8" Dia. NPT (for water treatment conn.) Unit comes with a 50 Mesh Water Strainer (installation required)
- (D) Drain: 1.50" Dia.
- (E) Inlet for Generator Defiming Solution

NOTES:
Cleveland Range reserves right of design improvement or modification, as warranted.
Many regional, state and local codes exist and it is the responsibility of the owner and installer to comply with the codes.
Cleveland Range equipment is built to comply with applicable standards for manufacturers, included among those approval agencies are UL, ULC, UL/NSF#4 and CSA (AGA, CGA).

(NOT TO SCALE)
SECT. IV PAGE 16
0612
Litho in U.S.A.

Cleveland

COMBI OVEN-STEAMER
Options & Accessories

Project _____
Item _____
Quantity _____
FCSI Section _____
Approval _____
Date _____

CONVOTHERM by Cleveland

MODEL: ☐ *CWT-06 (includes complete system)*

Claris Water Treatment System

for Convotherm by Cleveland Combi Ovens

System Components, Includes:

- one (1) Pre-filter
- one (1) Claris X-Large Steam System
- one (1) Claris Flow Meter
- one (1) Water Test Kit

Accessories:

☐ Claris X-Large Filter Cartridge (CWT-XLC)

☐ EC-110 Cartridge - Prefilter Replacement Cartridge (EC-110)

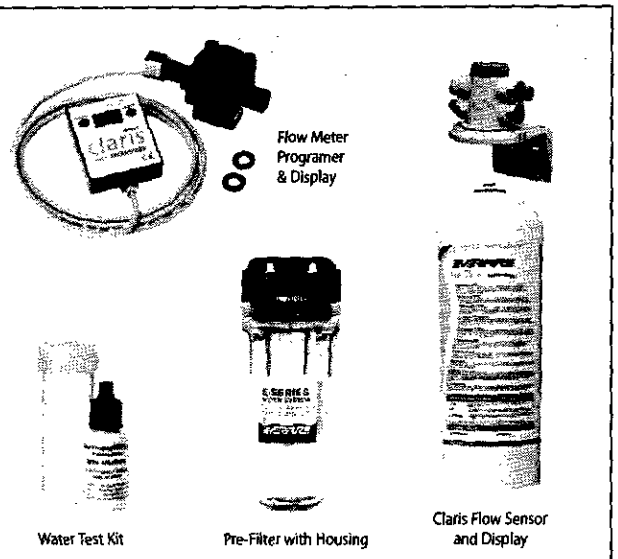

Short Form Specifications

Shall be Cleveland Model CWT-06 Claris Water Treatment System including one (1) Pre-filter, one (1) Claris X-Large Steam System, one (1) Claris Flow Meter & one (1) Water Test Kit.

Cleveland Standard Features:

E-10 Prefilter System

- Filters out larger dirt and rust particles.
- Extends the life of primary filter cartridges.
- Tightly spun EC-110 sediment cartridge delivers 10 micron nominal filtration.
- Durable slim bowl design makes cartridge replacement easy.
- Clear housing allowing visual inspection of trapped particles to determine when to change the cartridge.
- 10" bowl design accepts most 10" drop in cartridges.

Claris Single Head with Zero Bypass

- Commercial quality filter head designed exclusively for Claris filter cartridges.
- Engineered for durability, strength and longevity.
- Corrosion resistant hardware.
- The system can be operated horizontally or vertically, depending on the available space.

Water Test Kit

- Used to determine the scale causing hardness (mainly calcium and magnesium).
- Indicates water test completion when the color changes from blue-green to orange-yellow.

Claris X-Large Filter Cartridge:

- 5-stage filtration process.
- Operation in vertical or horizontal position.
- NSF Certified under NSF/ANSI Standard 42.

Claris Flow Sensor and Display

- Monitors water usage rate to determine cartridge replacement.
- Display indicates cartridge replacement based on gallons of water treated.
- Display unit provides information about residual capacity of installed cartridge, total filtrate volume since flow sensor was installed, filtrate volume and operation time of last five (5) installed cartridges.

1333 East 179 St.
Cleveland, Ohio, U.S.A. 44110
Tel: 1-216-481-4900
Fax: 1-216-481-3782
Web Site: www.ClevelandRange.com
Email: Steam@ClevelandRange.com

Manitowoc

Technical Data:

Claris Water Treatment Components

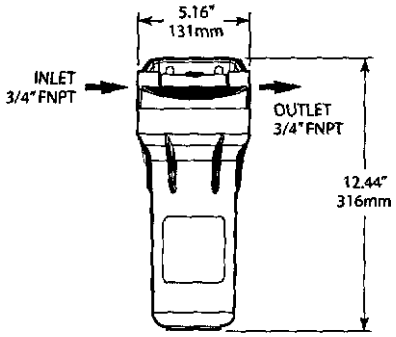

Pre-Filter

Overall Dimensions:	12.44" H x 5.16" W (316mm H x 131mm W)
Inlet Connection:	3/4" FNPT
Outlet Connection:	3/4" FNPT
Service Flow Rate:	Maximum 6.0 gpm (22.7 Lpm)
Pressure Requirement:	35 psi - 70 psi (2.4 – 4.8 bar) non-shock
Water Temperature Inlet Requirement:	39° - 86°F (4° - 30°C)
Electrical:	No electrical connection required
Shipping Weight:	4 lbs.
Operating Weight:	6 lbs.

Flow Meter Sensor

Overall Dimensions:	3.25 W x 2" H x 2" D (83mm W x 51mm H x 51mm D)
Connection:	Inlet: 3/8-inch BSP F nut Outlet: 3/8-inch BSP M
Service Flow Rate:	0.44-3.08 gpm (100-700 LPH)
Pressure Loss:	184 gph (up to 700 LPH flow rate) 3 PSI (0,2 bar)
Pressure Requirement:	35 psi - 70 psi (2.4 – 4.8 bar) non-shock
Ambient Temperature (min/max):	39 - 104 °F (+4 - +40 °C)
Installation Position:	Horizontal recommended

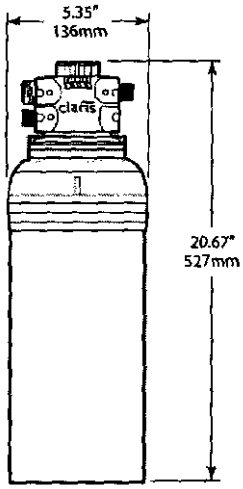

Claris X-Large Filter Cartridge

Overall Dimensions:	20.67" H x 5.35" Dia. (525 mm x 136 mm)
Service Flow Rate:	1.0 gpm (3.7 Lpm)
Treatment Capacity*:	1,100 gal.
Pressure Requirement:	35 psi - 70 psi (2.4 – 4.8 bar) non-shock
Water Temperature Inlet Requirement:	39° - 86°F (4° - 30°C)
Electrical:	No electrical connection required

*Capacity is based on water hardness of 180 ppm.

Programmer & Display

Overall Dimensions:	2.75" H x 2" W (70mm H x 51mm W)
Cable:	59" (1.5 meters)
Electrical:	Lithium Coin Battery (type CR2032)

WATER QUALITY REQUIREMENTS FOR CLEVELAND STEAMERS

TDS ..... < 60 ppm	pH Factor ..... 7.0 – 8.5
Total Alkalinity ..... < 20 ppm	Free Chlorine ..... < 0.1 ppm
Silica ..... < 13 ppm	Conductivity ..... min. 20 µS/cm (50 kOhms)
Chloride ..... < 25 ppm	

NOTES: Proper maintenance of the steam cooking equipment and water treatment system is the responsibility of the owner/operator. Improper installation or maintenance may void the warranty. Refer to the Operators Manual for proper instructions. A water quality analysis is required prior to installing the Claris water treatment system, since water conditions vary throughout the country.

Do not use the "Claris System" with water that is microbiologically unsafe or of unknown quality, without adequate disinfection before or after the system.

NOTES:
Cleveland Range reserves right of design improvement or modification, as warranted.
Many regional, state and local codes exist and it is the responsibility of the owner and installer to comply with the codes.
Cleveland Range equipment is built to comply with applicable standards for manufacturers.

Cleveland

STEAMCHEF™ BOILERLESS CONVECTION STEAMERS

Project _____
Item _____
Quantity _____
FCSI Section _____
Approval _____
Date _____

SteamChef™ 6

High Speed Convection Steamer,
Automatic Water Fill & Drain, Two 32,000
BTU Gas Boiler-Free Counter Type Design

MODEL: ☐ *(2) 22CGT66.1*

Cleveland Standard Features

- Cooking capacity for up to six 12" x 20" x 2.5" deep steam table pans (1/1 G/N, 65 mm) per compartment.
- High-speed gas convection steamer with open style 1.0 gallon water reservoir located at the bottom of the cooking compartment for easy access and maintenance.
- Fan forced convection steam with patented **KleanShield**™ cooking compartment design. **KleanShield**™ collects and removes condensate waste from the cooking compartment. This keeps the compartment clean, safe from impurities and easy to maintain. Reduces foaming and avoids contamination of the reservoir water.
- Automatic water level controls, fills when main power switch is turned ON, Low Water and High Water probes inside cooking compartment maintains water levels during cooking, eliminating the need to manually refill and monitor water level during cooking. Large overflow port in rear wall. 193° preheat and standby temperature. High Temperature Automatic Safety Shut-off.
- Steam and Fan Shut Off Control when compartment door is opened.
- 32,000 BTU (per compartment) high efficency atmospheric gas boilerless style heating system.
- Front access works in a drawer style burners for easy servicing.
- Includes a 60-Minute Electro-Mechanical Timer, LED Indicator Lights for Power On and Reset. Timed and Manual Bypass Switch for constant steaming.
- Exclusive **SteamChef**™ Automatic Drain Control. Compartment drains when main power is turned OFF via 1/2" ball valve with micro switch circuitry. Simple 1.5" NPT drain connection required with water saving cold water condenser and 3 minute rinse feature.
- Left Hand Door Hinging: Compartment Doors hinged on the left, controls on the right.
- Exclusive, durable 14 gauge stainless steel compartment door and latch withstands abuse and heavy wear. Two piece compartment door with free floating inner door is self adjustable and prevents leaks. Reversible door gasket doubles the life of the gasket.
- Heavy-duty 4" (102mm) Skid Resistant Adjustable Legs with Flanged Feet.
- UL - Gas, UL - Sanitation (NSF Standards).

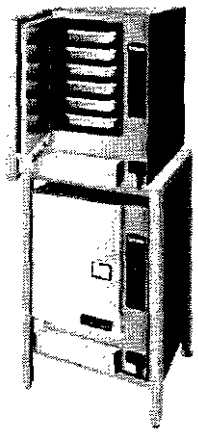

Short Form Specifications

Shall be a Cleveland **SteamChef™ 6**, *model (2) 22CGT66.1, two stacked single compartment 32,000 BTU high efficency atmospheric gas boilerless style heating systems. Front access "works in a drawer" style burners for easy servicing. Standard with Compartment Controls and 60-minute electro-mechanical timer. Capacity for six 2.5" (1/1 G/N, 65 mm) full size steam table pans per compartment. Includes 1/2" ball valve style automatic drains. Automatic water level controls. Heavy-duty 14 gauge stainless steel cooking compartment doors and latches.* **KleanShield**™ *clean cavity protection. 4" Adjustable Legs. Requires field installation. Includes Stacking Stand, Gas Flue Exhaust Kit and Common Drain and Water Connection Manifold.*

- Stacking combination requires field installation of the steamers, stand and flue. This combination includes the following items:
  - ES26304466G Stacking Stand (PN 113130G)
  - Gas Flue Exhaust Kit
  - Common Drain and Water Connection Manifold

Options & Accessories

- ☐ 5 Foot (1524mm) FDA Approved National Hose Thread style water connection kit (garden hose thread), 2 required (NHT60)
- ☐ Single Point Water Connection (SPW)
- ☐ ON/OFF Compartment control only, no timer (MC)
- ☐ Electronic Timer

SECT. B PAGE 17
0710

1333 East 179 St., Cleveland, Ohio, U.S.A. 44110
Tel: 1-216-481-4900 Fax: 1-216-481-3782
Web Site: www.ClevelandRange.com Email: Steam@ClevelandRange.com
Manitowoc

Each compartment has capacity for:
Six, 12" x 20" x 2½" deep Cafeteria Pans.
or
Twelve, 12" x 20" x 1" deep Cafeteria Pans.
or
Four, 12" x 2

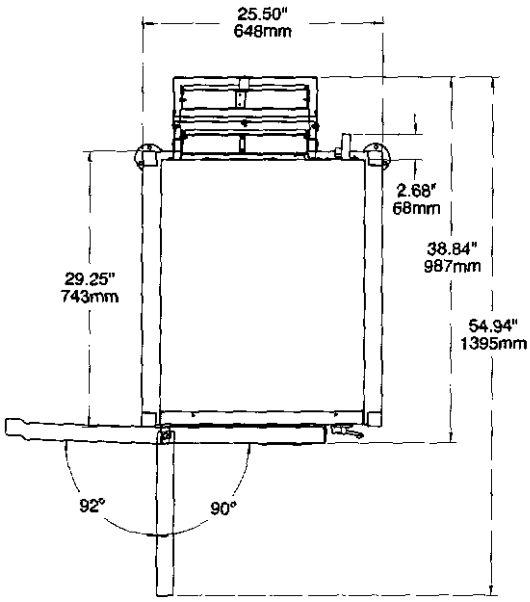

OPERATING CLEARANCES

3" Left, 3" Right and 3" Rear.

SERVICE CLEARANCES

12" on control side. Contact factory for variances to clearances.

CONTROLS (per compartment)

60-minute electro mechanical timer with load compensating feature.

Two function control switch for Timed Cooking and Continuous Steaming.

APPROVALS

UL - Gas, UL - Sanitation (NSF Standards)

GAS (one connection per unit)

1/2" Dia. IPS

32,000 BTU's

SUPPLY PRESSURE: NATURAL - 4.00' W.C. minimum, 14.00" W.C. maximum
PROPANE - 11.00" W.C. minimum, 14.00" W.C. maximum

Manufacturer must be notified if unit will be used above 2,000 ft. altitude.

ELECTRICAL (one connection per unit)

120V, 1 Phase, 4 Amps.

COLD WATER

C-1: Feed water for reservoir, 35 Psi Minimum, 60 Psi Maximum.

C-2: Drain condenser water, 35 Psi Minimum, 60 Psi Maximum.

Two 3/4" NH-F (Garden Thread) connections. Use NSF approved hose.

DRAIN CONNECTION

1.5" NPT-M

Do not connect other units to this drain.

Drain line must be vented.

Do not connect the appliance's drain connection to any drain material that cannot sustain 140°.

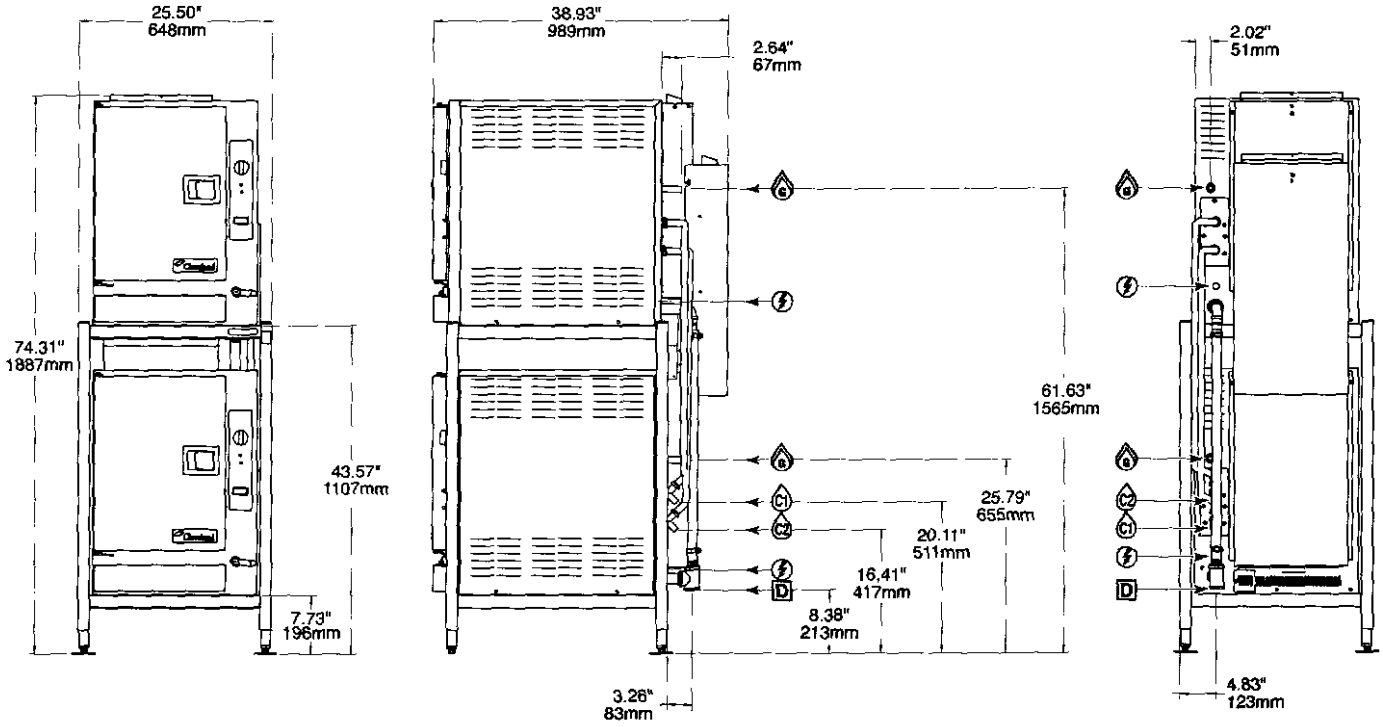

NOTES:
Cleveland Range reserves right of design improvement or modification, as warranted.
Many regional, state and local codes exist and it is the responsibility of the owner and installer to comply with the codes.
Cleveland Range equipment is built to comply with applicable standards for manufacturers. Included among those approval agencies are U.L/NSF#4 and CSA (AGA, CGA).

(NOT TO SCALE)
SECT. B PAGE 18
0710
Litho in U.S.A.

Cleveland

COMBI OVEN-STEAMER
Options & Accessories

Project _____
Item _____
Quantity _____
FCSI Section _____
Approval _____
Date _____

CONVOTHERM by Cleveland

MODEL: ☐ *CWT-06 (includes complete system)*

Claris Water Treatment System

for Convotherm by Cleveland Combi Ovens

System Components, Includes:

- one (1) Pre-filter
- one (1) Claris X-Large Steam System
- one (1) Claris Flow Meter
- one (1) Water Test Kit

Accessories:

❒ Claris X-Large Filter Cartridge (CWT-XLC)
❒ EC-110 Cartridge - Prefilter Replacement Cartridge (EC-110)

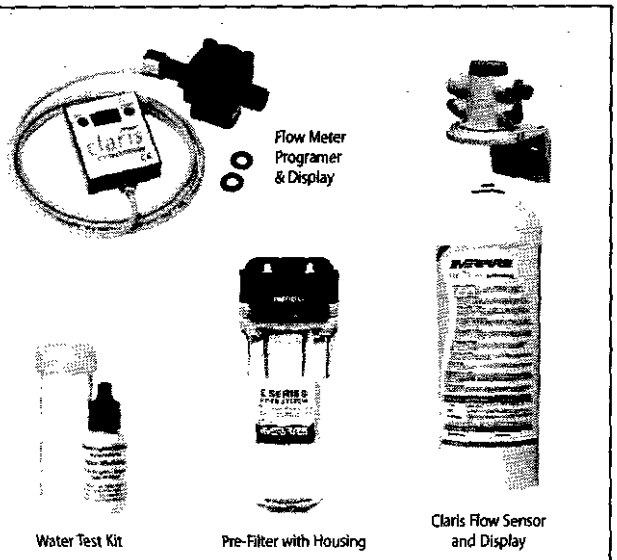

Short Form Specifications

Shall be Cleveland Model CWT-06 Claris Water Treatment System including one (1) Pre-filter, one (1) Claris X-Large Steam System, one (1) Claris Flow Meter & one (1) Water Test Kit.

Cleveland Standard Features:

E-10 Prefilter System

- Filters out larger dirt and rust particles.
- Extends the life of primary filter cartridges.
- Tightly spun EC-110 sediment cartridge delivers 10 micron nominal filtration.
- Durable slim bowl design makes cartridge replacement easy.
- Clear housing allowing visual inspection of trapped particles to determine when to change the cartridge.
- 10" bowl design accepts most 10" drop in cartridges.

Claris Single Head with Zero Bypass

- Commercial quality filter head designed exclusively for Claris filter cartridges.
- Engineered for durability, strength and longevity.
- Corrosion resistant hardware.
- The system can be operated horizontally or vertically, depending on the available space.

Water Test Kit

- Used to determine the scale causing hardness (mainly calcium and magnesium).
- Indicates water test completion when the color changes from blue-green to orange-yellow.

Claris X-Large Filter Cartridge:

- 5-stage filtration process.
- Operation in vertical or horizontal position.
- NSF Certified under NSF/ANSI Standard 42.

Claris Flow Sensor and Display

- Monitors water usage rate to determine cartridge replacement.
- Display indicates cartridge replacement based on gallons of water treated.
- Display unit provides information about residual capacity of installed cartridge, total filtrate volume since flow sensor was installed, filtrate volume and operation time of last five (5) installed cartridges.

1333 East 179 St., Cleveland, Ohio, U.S.A. 44110
Tel: 1-216-481-4900 Fax: 1-216-481-3782
Web Site: www.ClevelandRange.com Email: Steam@ClevelandRange.com

Manitowoc

Technical Data:

Claris Water Treatment Components

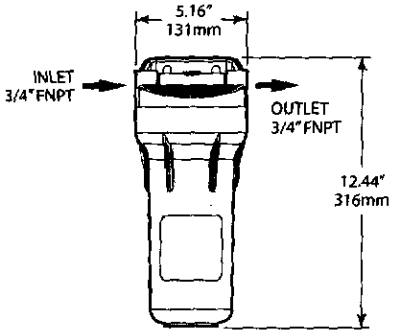

Pre-Filter

Overall Dimensions:	12.44" H x 5.16" W (316mm H x 131mm W)
Inlet Connection:	3/4" FNPT
Outlet Connection:	3/4" FNPT
Service Flow Rate:	Maximum 6.0 gpm (22.7 Lpm)
Pressure Requirement:	35 psi - 70 psi (2.4 – 4.8 bar) non-shock
Water Temperature Inlet Requirement:	39° - 86°F (4° - 30°C)
Electrical:	No electrical connection required
Shipping Weight:	4 lbs.
Operating Weight:	6 lbs.

Flow Meter Sensor

Overall Dimensions:	3.25 W x 2" H x 2" D (83mm W x 51mm H x 51mm D)
Connection:	Inlet: 3/8-inch BSP F nut Outlet: 3/8-inch BSP M
Service Flow Rate:	0.44-3.08 gpm (100-700 LPH)
Pressure Loss:	184 gph (up to 700 LPH flow rate) 3 PSI (0,2 bar)
Pressure Requirement:	35 psi - 70 psi (2.4 – 4.8 bar) non-shock
Ambient Temperature (min/max):	39 - 104 °F (+4 - +40 °C)
Installation Position:	Horizontal recommended

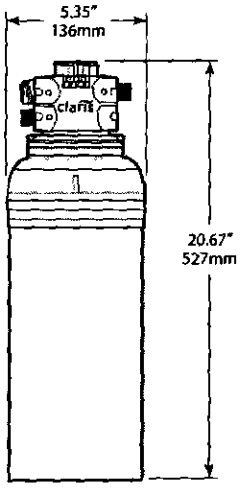

Claris X-Large Filter Cartridge

Overall Dimensions:	20.67" H x 5.35" Dia. (525 mm x 136 mm)
Service Flow Rate:	1.0 gpm (3.7 Lpm)
Treatment Capacity*:	1,100 gal.
Pressure Requirement:	35 psi - 70 psi (2.4 – 4.8 bar) non-shock
Water Temperature Inlet Requirement:	39° - 86°F (4° - 30°C)
Electrical:	No electrical connection required

*Capacity is based on water hardness of 180 ppm.

Programmer & Display

Overall Dimensions:	2.75" H x 2" W (70mm H x 51mm W)
Cable:	59" (1.5 meters)
Electrical:	Lithium Coin Battery (type CR2032)

WATER QUALITY REQUIREMENTS FOR CLEVELAND STEAMERS

TDS ..... < 60 ppm	pH Factor ..... 7.0 – 8.5
Total Alkalinity ..... < 20 ppm	Free Chlorine ..... < 0.1 ppm
Silica ..... < 13 ppm	Conductivity ..... min. 20 µS/cm (50 kOhms)
Chloride ..... < 25 ppm	

NOTES: Proper maintenance of the steam cooking equipment and water treatment system is the responsibility of the owner/operator. Improper installation or maintenance may void the warranty. Refer to the Operators Manual for proper instructions. A water quality analysis is required prior to installing the Claris water treatment system, since water conditions vary throughout the country.

Do not use the "Claris System" with water that is microbiologically unsafe or of unknown quality, without adequate disinfection before or after the system.

NOTES:
Cleveland Range reserves right of design improvement or modification, as warranted.
Many regional, state and local codes exist and it is the responsibility of the owner and installer to comply with the codes.
Cleveland Range equipment is built to comply with applicable standards for manufacturers.

GRADY'S Restaurant and Bar Supply

430 West 4th Street • Pueblo, CO 81003
[719] 542-8853 • fax (719) 542-8857
1-800-566-7068
www.gradysrestaurantsupply.com
order@gradysrestaurantsupply.com

DINA
7195428853
PUEBLO HOTEL SUPPLY DBA GRADY'
430 W 4TH ST
PUEBLO CO 81003

1 LBS 1 OF 1

SHIP TO:
JACQUELINE SATTERLEE
1-573-751-4925
DPMM
ROOM 630
301 WEST HIGH STREET
JEFFERSON CITY MO 65101-1517

UPS Internet Shipping: Shipment Label

)-01

RCVD FEB 18'14 AM 8:52 OA-DPMM

UPS EARLY A.M. 1+

TRACKING #: 1Z 801 756 15 9157 8538

BILLING: P/P

UIS 16.1.04 MACNV50 48.0A 01/2014

HARRY S TRUMAN BUILDING
301 W HIGH ST
RM 630
JEFFERSON CITY MO 65101-1517

2/17