These drawings and their measurements are not exact

Suggested changes requested by Food Service

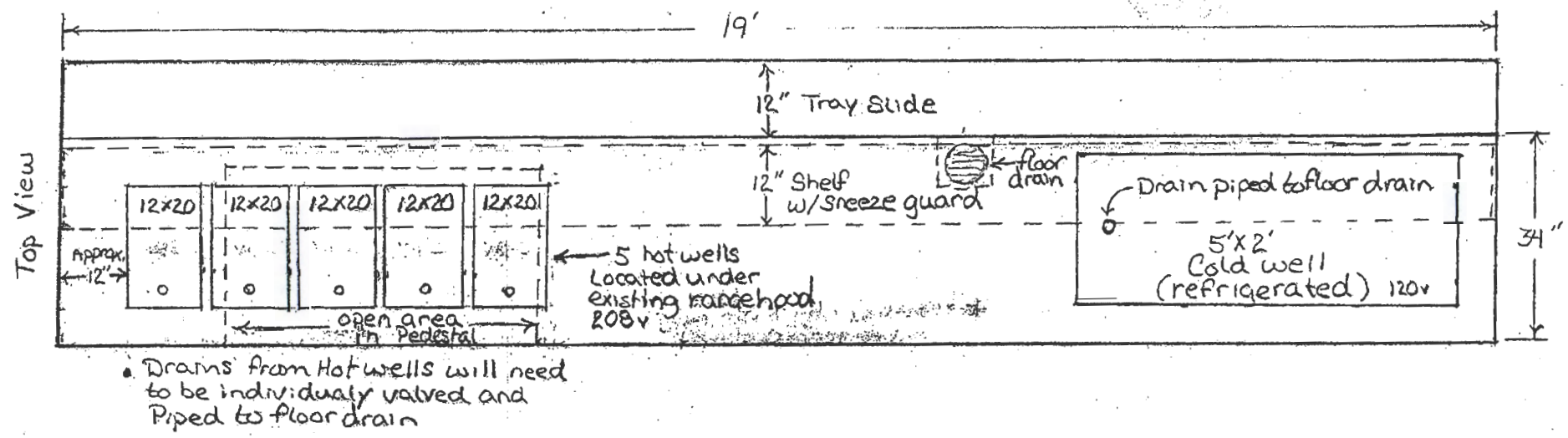

• Drains from Hot wells will need to be individualy valved and Piped to floor drain

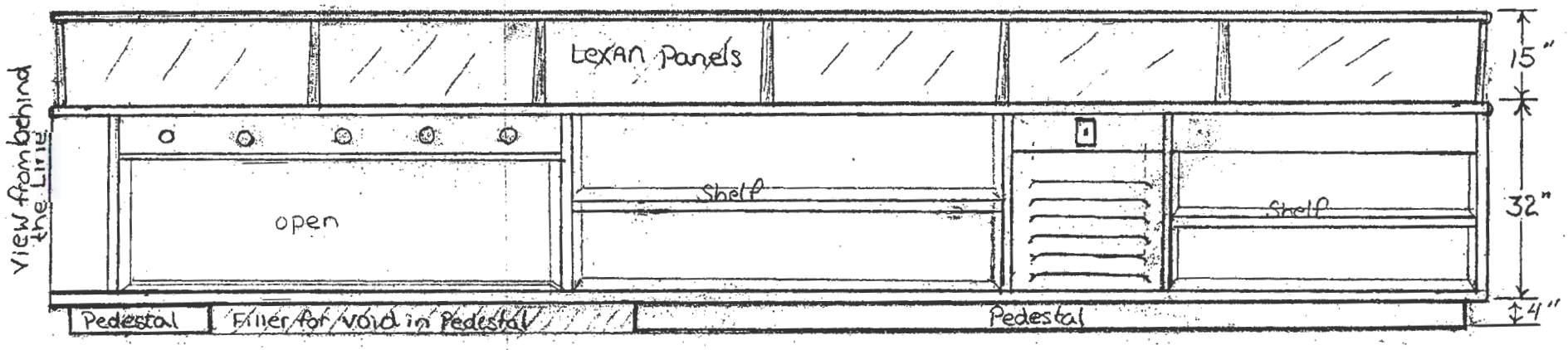

Suggested Changes to Serving Line
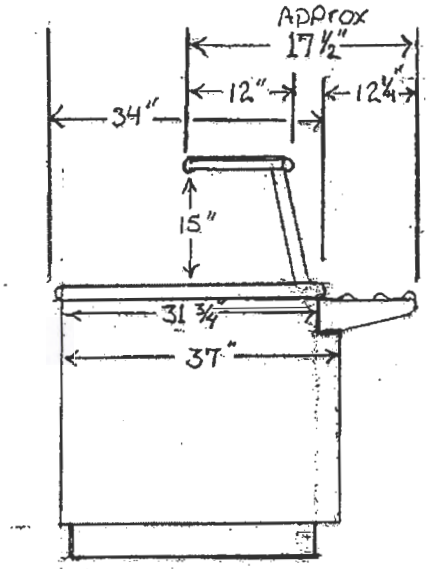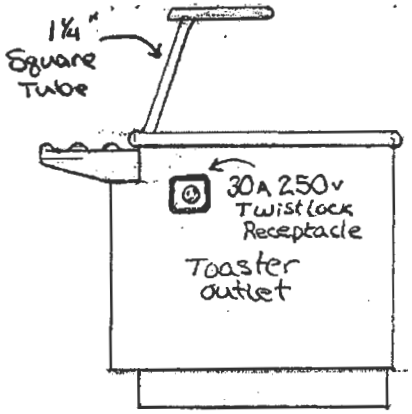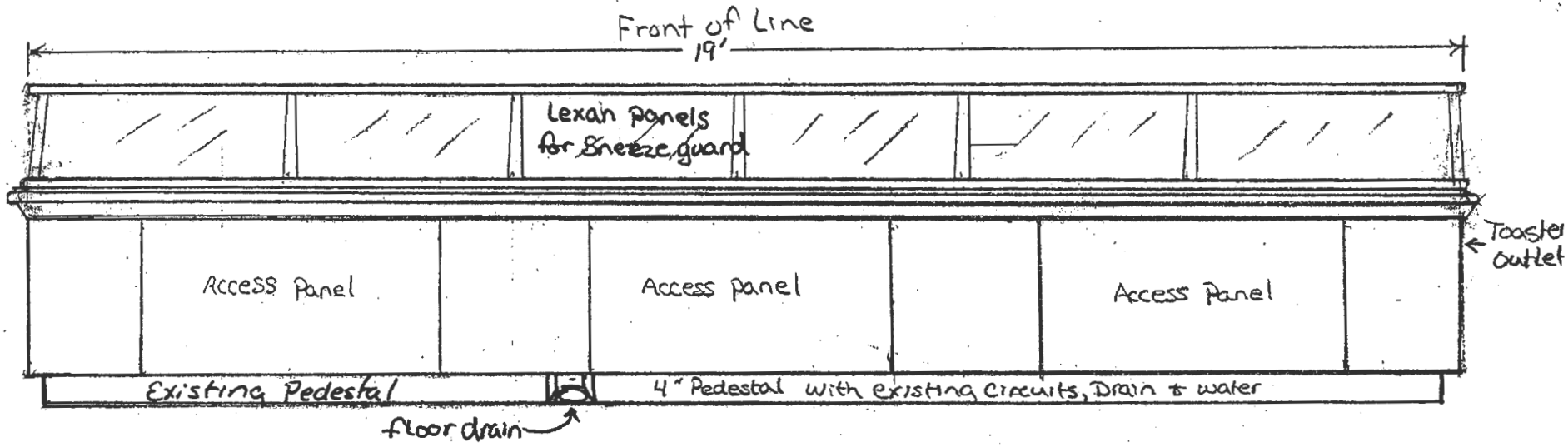
all measurements and drawings are approximate